EJBX

- Zone 1, 2, 21, 22
- Group IIB+H_2
- Stainless steel junction boxes
- Choice of 17 sizes
- IP 66 / 67

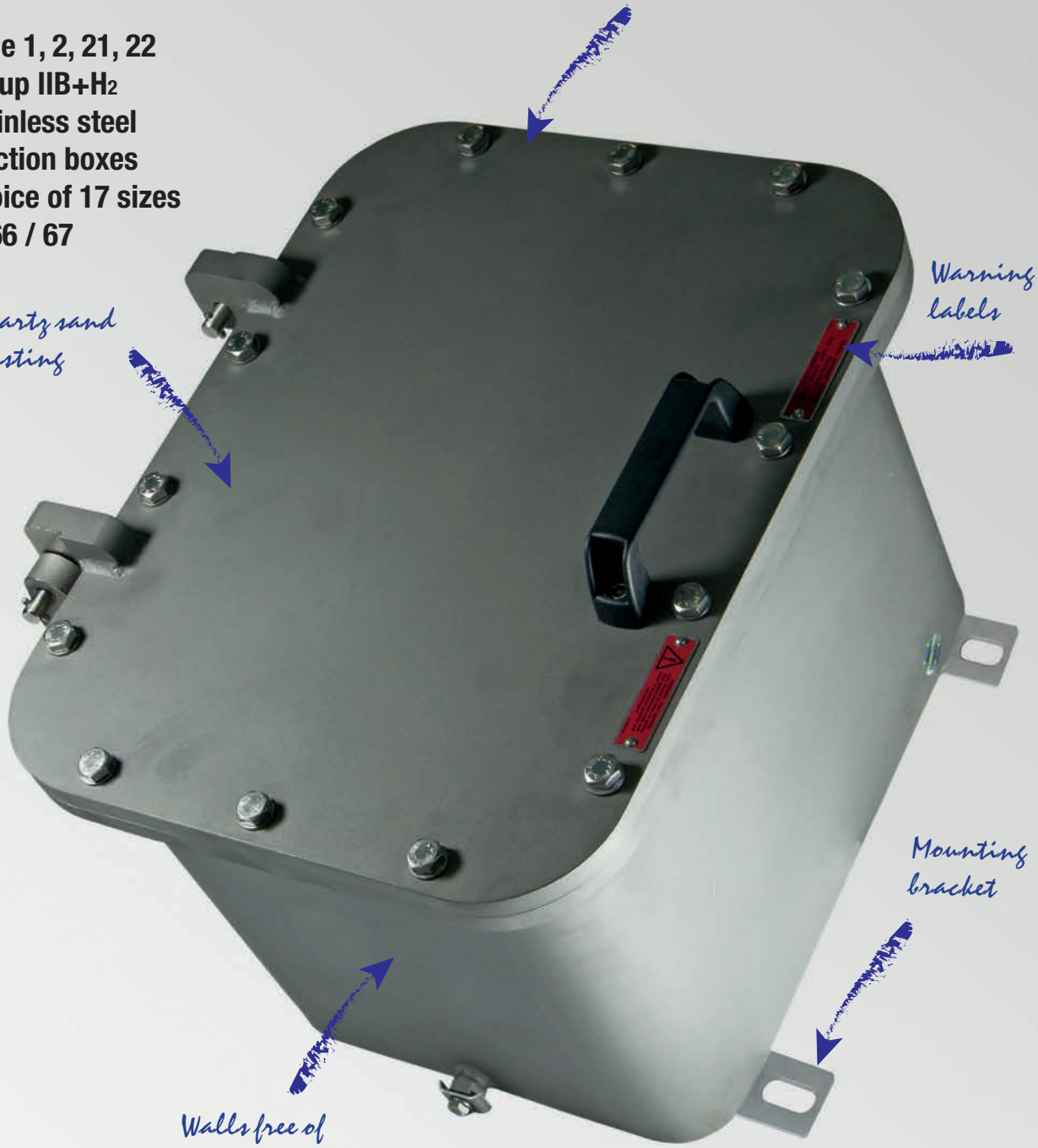

Silicone gasket between body and lid

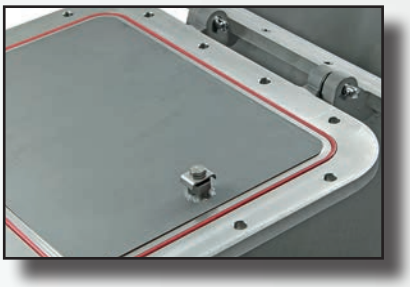

Internal earth screw in body

Hinge between body and lid

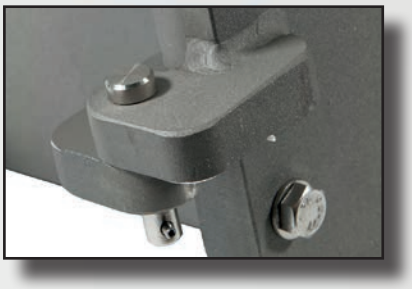

EJBX-... series Stainless steel junction boxes gas group IIB+H_2

EJBX series junction boxes are installed in industrial plants where there is a risk of explosion and fire and where combustible dust is present, classified as Zone 1, 2, 21, 22. These enclosures are made from welded 316L sheet stainless steel and come complete with stainless steel screws and a silicone gasket running around the perimeter between the body and lid to provide the IP66 protection degree. The EJBX units are mostly used as junction boxes with relevant connection terminals, as enclosures for fuses, transformers and reactors, as monitoring and signalling boards, light and power boards or motor starter boxes with various configurations, which are custom made to the requirements of our customers worldwide.

Cortem Group labels its products with a non-removable adhesive label featuring a hologram and an alphanumerical univocal code, as a safety measure against the illegal sale of fakes so that all the products are guaranteed as original. Non-compliance with the International standards entails serious risks for the environment, especially for those working daily on the plants.

Application sectors:

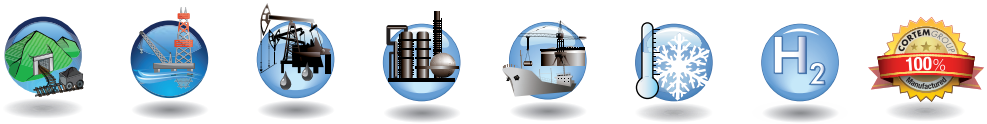

Mining | Offshore plants | Onshore plants | Oil refineries | Oil loading/ offloading wharfs | Low temperatures | Presence of hydrogen | 100% Cortem product

CERTIFICATION DATA FOR EMPTY ENCLOSURES

Classification:	Group I/II	Category 2GD		
Installation: EN 60079.14	zone 1 - zone 2 (Gas)	zone 21 - zone 22 (Dust)		
Marking:	CE 0722 Ex II 2 GD - Ex db IIB+H_2 Gb - Ex tb IIIC Db - IP66/67			
	CE 0722 Ex I M2 - Ex db I Mb			
Certification:	ATEX CESI 00 ATEX 036U			
	ATEX FIDI 25 ATEX 0001U (EJBX-8...)			
	IEC Ex CES 14.0017U	All IEC Ex, UKEX, ECASEx, TR CU, INMETRO certification data can be downloaded from www.cortemgroup.com		
	IEC Ex FIDI 25.0003U (EJBX-8...)			
	UKEX AVAILABLE			
	ECASEx AVAILABLE			
	TR CU AVAILABLE			
	INMETRO DNV 16.0099U			
Standards:	CENELEC EN 60079-0: 2018, EN 60079-1: 2014, EN 60079-31: 2014, EN 60529: 1991 and EUROPEAN DIRECTIVE 2014/34/UE			
Ambient Temp.:	-60°C +70°C	With boxes complete with polycarbonate indicator on lid Ta -40°C +70°C.		
	-60°C +100°C	On request only for EJB enclosures without accessories and control and signalling devices.		
	-60°C (Use indicator light series M-0457**AL**, M-0457**AL**/3, M-0457**IN** or M-0457**IN**/3)			
Degree of protection:	IP66/67	For enclosures without control and signalling devices		
	IP66	For enclosures with Cortem M-0...-series control and signalling devices		

This equipment can be used in an environment containing explosive atmosphere and with the presence of hydrogen.

CERTIFICATION DATA FOR ENCLOSURES WITH TERMINALS

Classification:	Group II	Category 2GD		
Installation: EN 60079.14	zone 1 - zone 2 (Gas)	zone 21 - zone 22 (Dust)		
Marking:	CE 0722 Ex II 2 GD - Ex d IIB+H_2 T... Gb - Ex tb IIIC T...°C Db - IP66/67			
	CE 0722 Ex I M2 - Ex d I Mb			
Certification:	ATEX CESI 01 ATEX 027X			
	IEC Ex CES 16.0012X	All IEC Ex certification data can be downloaded from www.cortemgroup.com		
Standards:	CENELEC EN 60079-0: 2012, EN 60079-1: 2014, EN 60079-31: 2014, EN 60529: 1991 and EUROPEAN DIRECTIVE 2014/34/UE			
Ambient Temp.:	-20°C (-60°C) +40°C	With temperature class T6 and maximum surface temperature T85°C.		
	-20°C (-60°C) +55°C	With temperature class T5 and maximum surface temperature T100°C.		
Degree of protection:	IP66/67			

CERTIFICATION DATA OF ENCLOSURES FOR CONTROL, MONITORING AND SIGNALLING UNITS

Classification:	Group I/II	Category 2GD		
Installation: EN 60079.14	zone 1 - zone 2 (Gas)	zone 21 - zone 22 (Dust)		
Marking:	CE 0722 Ex II2GD - Ex db IIB+H_2 T... Gb - Ex tb IIIC T...°C Db - IP66/67			
	CE 0722 Ex I M2 - Ex db I Mb			
Certification:	ATEX CESI 01 ATEX 027X			
	ATEX FIDI 25 ATEX 0002X (EJBX-8...)			
	IEC Ex CES 16.0012X	All IEC Ex, ECASEx, TR CU, CCC, INMETRO certification data can be downloaded from www.cortemgroup.com		
	IEC Ex FIDI 25.0004X (EJBX-8...)			
	ECASEx DISPONIBILE			
	TR CU DISPONIBILE			
	INMETRO DNV 14.0153			
	CCC DISPONIBLE			
Standards:	CENELEC EN 60079-0: 2012, EN 60079-1: 2014, EN 60079-31: 2014, EN 60529: 1991 and EUROPEAN DIRECTIVE 2014/34/UE			
Ambient Temp.:	-20°C +40°C	With temperature class T6 and maximum surface temperature T85°C.		
	-20°C +55°C/+70°C	With temperature class T5, T4 and maximum surface temperature T100°C, T134°C.		
	-60°C on request. (Use indicator light series M-0457AL, M-0457AL/3, M-0457IN or M-0457IN/3)			
Degree of protection:	IP66/67	For enclosures without control and signalling devices		
	IP66	For enclosures with Cortem M-0...-series control and signalling devices		

CERTIFICATION DATA OF ENCLOSURES SERVING INTERFACE UNIT CONTROL AND MONITORING FUNCTION

Classification:	Group II	Category 2GD		
Installation: EN 60079.14	zone 1 - zone 2 (Gas)	zone 21 - zone 22 (Dust)		
Marking:	CE 0722 Ex II2(1)GD - Ex db [ia Ga] IIB+H_2 T... Gb - Ex tb IIIC T...°C Db - IP66/67			
	CE 0722 Ex I M2 - Ex db [ia Ma] I Mb			
Certification:	ATEX CESI 02 ATEX 073X			
	IEC Ex CES 16.0014X	All IEC Ex, ECASEx certification data can be downloaded from www.cortemgroup.com		
	ECASEx AVAILABLE			
Standards:	CENELEC EN 60079-0: 2009, EN 60079-1: 2007, EN 60079-11: 2011, EN 60079-26: 2007, EN 60079-31: 2009, EN 60439-1, EN 60079-0:2018, EN 60529 and EUROPEAN DIRECTIVE 2014/34/UE			
Ambient Temp.:	-20°C +40°C	With temperature class T6 and maximum surface temperature T85°C.		
	-20°C +55°C	With temperature class T5 and maximum surface temperature T100°C.		
	-60°C on request. (Use indicator light series M-0457**AL**, M-0457**AL**/3, M-0457**IN** or M-0457**IN**/3)			
Degree of protection:	IP66/67	For enclosures without control and signalling devices		

Stainless steel properties: The stainless steel used by Cortem to produce enclosures and accessories designed for use in cryogenic plants and highly corrosive environments is a very low carbon Iron-Chromium-Nickel-Molybdenum alloy. This alloy is highly resistant to intergranular (or intercrystalline) corrosion and to pitting corrosion. It is classified as an austenitic stainless steel UNI EN 10088-3 X 2 CrNiMo 17-12-2-E or AISI 316L according to the American Iron and Steel Institute. Its main quality is the spontaneous formation of a thin layer of chromium oxide on the surface that protects the metal underneath from corrosion attack. In addition, even if the metal is inadvertently damaged by abrasion or scratches, this film is self-renewing.

EJBX-... series Stainless steel junction boxes gas group IIB+H_2

MECHANICAL FEATURES

Body and lid:	AISI 316L stainless steel
Hinges:	Lost-wax cast and welded onto enclosure
Lid handle:	Made of black painted steel for EJBX-55,55B, EJBX-6,6B, EJBX-7 and EJBX-8,8B,8BB made of black painted plastic for all other models.
Treatment:	Quartz sand blasting
Gasket:	Acid, hydrocarbon and high temperature-resistant silicone, located between body and lid
Certification label:	Adhesive label located inside on empty enclosures; stainless steel label riveted onto lid on other versions
Bolts and screws:	Stainless steel
Earth screws:	M6 stainless steel. On inside and outside of body and on lid complete with anti-rotation brackets
Mounting brackets:	4 feet welded onto body

Lid featuring Cortem easy-close system.

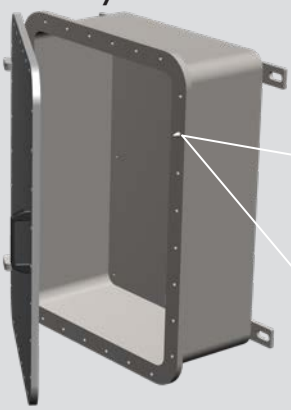

A locating peg is screwed into the body to make it easier to close the lid on enclosures mounted on a vertical frame. This system is used in enclosures EJBX-4 /4B, EJBX-45 /45B, EJBX-5 /5B, EJBX-6 /6B, EJBX-7, EJBX-8, 8B, 8BB.

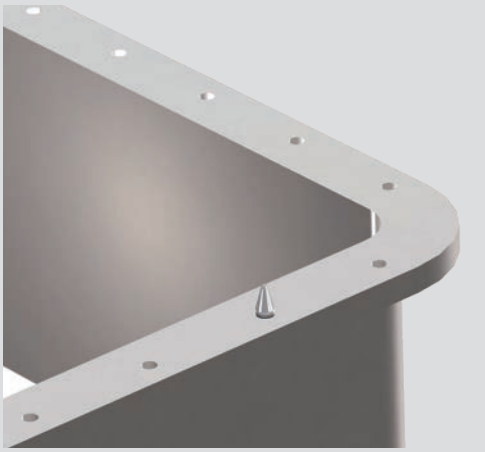

ACCESSORIES AVAILABLE ON REQUEST/ SPECIAL REQUESTS

Hinges on the short side (code EJBX-...**S**)
Breather valve Code ECD-210S
Drain valve Code ECD-210S
2.5mm-thick stainless steel internal mounting plate (code BFE-...SS). See accessories section
Enclosures with windows on lid for instrument viewing / reading
External coating in your choice of paint colour
Thread options:

- NPT threads ANSI B1.20.1
- GAS UNI ISO 7-1 thread
- Metric threads ISO 261/965

Cortem manufactures any type of custom-made products according to customer specifications and in compliance with the certification data.

ENCLOSURE SELECTION CHART

Code	Outside dimensions			Inside dimensions			Mounting			Weight
	A	B	C	a	b	c	E	D	Type	Kg
EJBX-01	272	212	166	200	140	123	140	214	P1	20
EJBX-01B	272	212	142	200	140	100	140	214	P1	18
EJBX-1	312	212	201	240	140	155	180	214	P1	25
EJBX-2	432	232	201	360	160	155	300	234	P1	37
EJBX-3	372	292	261	300	220	215	240	294	P1	45
EJBX-3B	372	292	201	300	220	155	240	294	P1	38
EJBX-4	432	332	284	360	260	235	300	334	P1	65
EJBX-4B	432	332	214	360	260	165	300	334	P1	57
EJBX-45	562	382	284	490	310	232	440	394	P1	92
EJBX-45B	562	382	234	490	310	188	440	394	P1	90
EJBX-5	632	432	324	560	360	275	500	434	P1	120
EJBX-5B	632	432	254	560	360	205	500	434	P1	107
EJBX-55	710	510	318	610	410	255	540	534	P2	170
EJBX-55B	710	510	218	610	410	155	540	534	P2	150
EJBX-6	860	640	409	760	540	345	680	654	P2	268
EJBX-6B	860	640	309	760	540	245	680	654	P2	235
EJBX-7	1000	700	338	900	600	275	820	714	P2	310
EJBX-8	1170	870	525	1040	740	437	920	868	P2	694
EJBX-8B	1170	870	450	1040	740	362	920	868	P2	664
EJBX-8BB	1170	870	375	1040	740	300	920	868	P2	631

DIMENSIONAL DRAWING

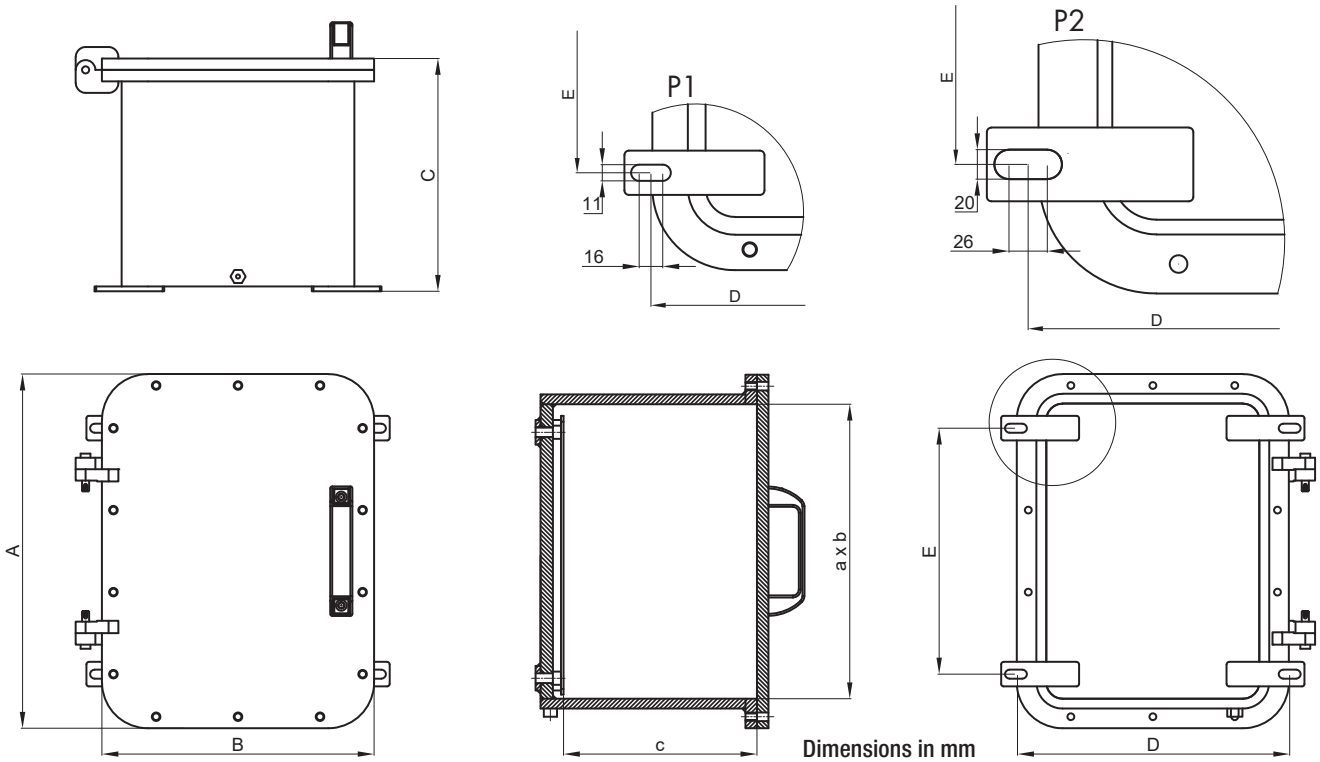

Dimensions in mm

EJBX-... series Body drilling data

THREAD COMPARISON CHART									
ISO 7-1	1/2"	3/4"	1"	1 1/4"	1 1/2"	2"	2 1/2"	3"	4"
ANSI B.20.1 NPT	1/2"	3/4"	1"	1 1/4"	1 1/2"	2"			
ISO 261/965	20x1.5	25x1.5	32x1.5	40x1.5	50x1.5	63x1.5	75x1.5	90x1,5	100x1,5
D Thread diameter	1	2	3	4	5	6	7	8	10

As required by the current standard, holes can be drilled by Cortem or by authorized partners who hold a production notification in accordance with ATEX Directive.

TYPE OF ENCLOSURE	HOLE DRILLING IN BODY																			
	Sides A and C										Sides B and D									
	Drilling area mm	MAXIMUM QUANTITY PER HOLE TYPE									Drilling area mm	MAXIMUM QUANTITY PER HOLE TYPE								
		1	2	3	4	5	6	7	8	10		1	2	3	4	5	6	7	8	10
EJBX-01	100x95	4	3	3	1	1	-	-	-	-	160x84	6	5	3	2	2	-	-	-	-
EJBX-01B	100x72	2	2	1	1	-	-	-	-	-	160x63	3	3	1	2	-	-	-	-	-
EJBX-1	100x130	6	5	4	2	2	1	1	1	-	200x125	12	11	6	6	4	2	2	1	1
EJBX-2	120x130	6	6	4	2	2	1	1	1	1	320x125	18	17	10	8	4	3	3	2	2
EJBX-3	180x190	16	12	9	6	6	4	2	2	1	260x180	20	18	12	11	9	6	3	3	1
EJBX-3B	180x130	12	8	6	4	4	2	1	1	1	260x120	15	14	8	6	6	3	2	2	2
EJBX-4	220x210	20	16	12	9	8	4	4	2	1	320x195	30	24	18	12	11	6	6	2	2
EJBX-4B	220x140	12	11	6	6	5	3	2	1	1	320x125	18	17	10	8	7	5	3	2	2
EJBX-45	270x205	25	20	16	12	9	6	4	3	1	450x195	43	32	28	18	17	10	8	4	3
EJBX-45B	270x155	15	15	12	8	6	5	2	2	1	450x145	26	24	21	12	12	9	4	3	2
EJBX-5	320x250	36	28	20	16	12	9	6	4	3	520x235	50	45	32	28	21	17	10	8	6
EJBX-5B	320x180	24	22	15	12	8	6	5	2	2	520x165	40	27	24	21	14	11	5	4	3
EJBX-55	370x230	35	24	24	15	12	8	6	3	3	570x215	53	40	32	24	20	12	10	4	4
EJBX-55B	370x130	21	18	12	10	8	4	3	3	-	570x115	22	19	19	15	11	6	5	4	-
EJBX-6	480x315	63	54	40	28	24	15	12	8	6	695x305	95	72	55	40	36	24	18	12	8
EJBX-6B	480x215	45	32	30	21	18	10	8	6	3	695x205	68	48	42	27	18	16	12	11	4
EJBX-7	540x250	63	48	36	28	21	17	10	8	3	840x235	85	70	52	35	33	27	16	14	5
EJBX-8	640x365	91	84	60	45	32	28	18	15	15	940x365	133	119	90	65	48	40	27	24	21
EJBX-8B	640x290	78	60	50	36	24	21	12	10	10	940x290	114	85	75	52	36	30	18	16	14
EJBX-8BB	640x215	52	48	30	27	16	14	12	10	5	940x215	76	68	45	39	24	20	18	16	7

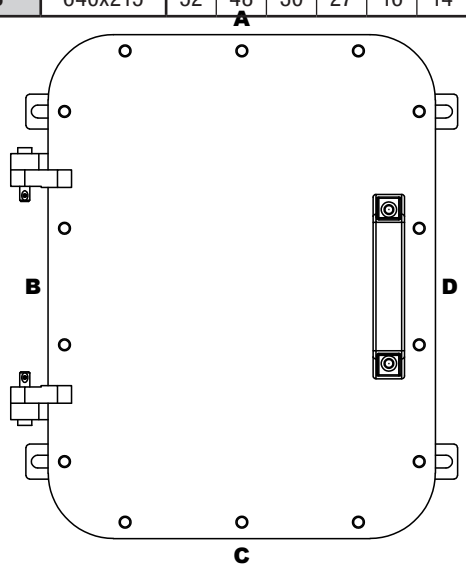

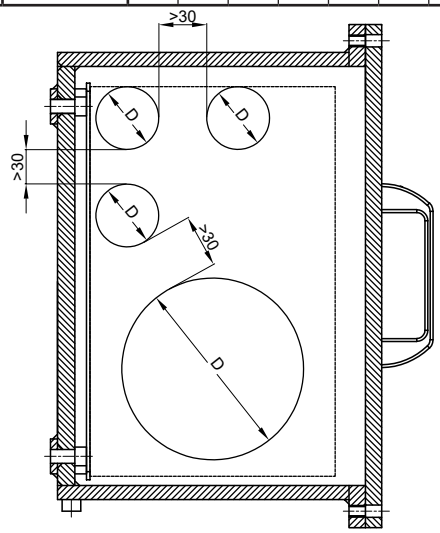

THREAD COMPARISON CHART								
D	ISO 228	G 3/8"	G 1/2"	G 3/4"	-	-	-	-
	ISO 261/965	M16x1.5	M20x1.5	M25x1.5	M32x1.5	M35x1.5	M40x1.5	M42x1.5

TYPE OF ENCLOSURE	HOLE DRILLING IN LID		
	Max. number of permitted holes	Drilling area mm	
		E	F
EJBX-01	2	200	114
EJBX-1	5	225	100
EJBX-2	9	345	125
EJBX-3	12	285	190
EJBX-4	17	345	225
EJBX-45	28	475	275
EJBX-5	40	545	325
EJBX-55	51	624	424
EJBX-6	70	730	495
EJBX-7	96	900	565
EJBX-8	140	970	670

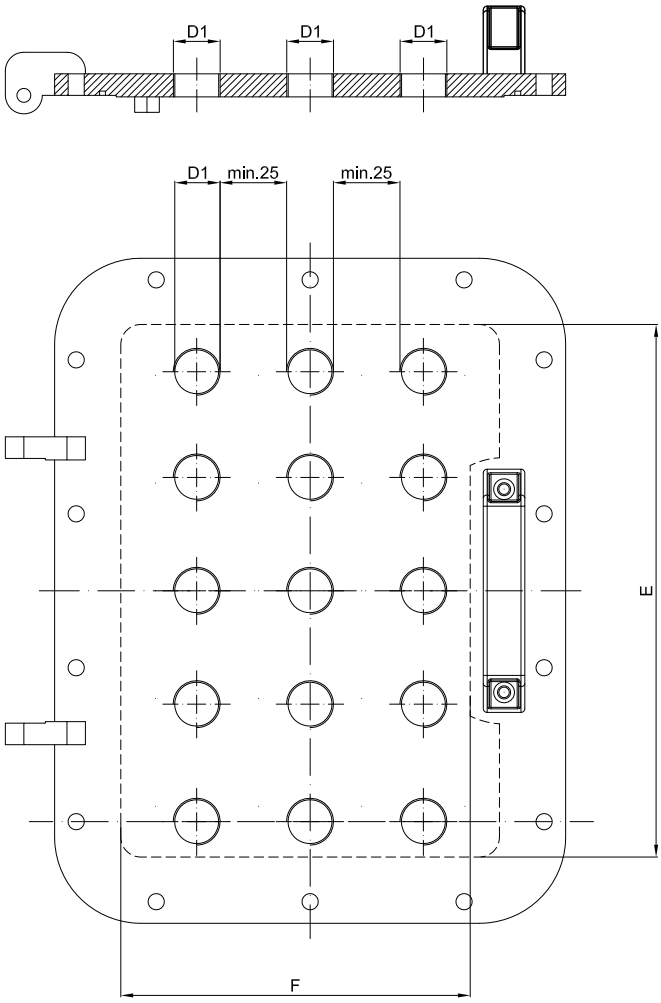

Notes:

- This standard is for illustrative purposes only since it has been designed exclusively for M42 holes.
- Standard holes refer to mounting of Cortem control and signalling devices.
- 3/8" Ø holes for Cortem std. side-mounted handles centre-to-centre distance >70mm.
- 1/2" Ø holes for Cortem std. heavy-duty series side-mounted handles centre-to-centre distance >120mm.

These enclosures are customized based on size, on the number of terminals or cables they are due to accommodate, or taking into account the number of cable entries and cabling requirements inside a system. Hence we can produce tailor-made solutions as long as you provide us with the appropriate parameters required at the quote request stage, such as the number of cable glands, unions or sealing fittings to be installed, so that we can determine the most suitable size of enclosure. All terminals can be fitted with your requested accessories and mounted on special rails that are fastened to the enclosure's internal mounting frames. Terminal strips can be arranged in various ways, as specified by the customer and always within the limits allowed by the certificate. The options are vertical, horizontal, in a number of rows, or on different levels using suitable spacers.

ELECTRICAL FEATURES

Rated voltage: 24 / 800 V
Rated frequency: 50 / 60 Hz

Modular terminals
Terminal cross-sectional area: 2.5; 4; 6; 10; 25; 35; 70; 95; 120; 185; 240; 300 [mm²]
Rated current: 12.5 - 452 [A]
Max. current density: 1.5 - 7 [A/mm²]

Multi-pole terminals
Terminal cross-sectional area: 3x16; 4x16; 3x25; 4x25; 3x40; 3x40; 4x40; 3x70; 4x125; 4x125; 3x200; 4x200; 3x315 [mm²]
Rated current: 48 - 252 [A]
Max. current density: 0.8 - 3 [A/mm²]

Busbars:

Dimensions of busbars:	20x5;	30x5;	40x5;	50x5;	60x5;	80x5;	100x4;	80x8;	100x5 [mm²]
Rated current:	240	350	480	600	690	800	800	1000	1000 [A]

ATEX - IECEx label for terminal enclosures

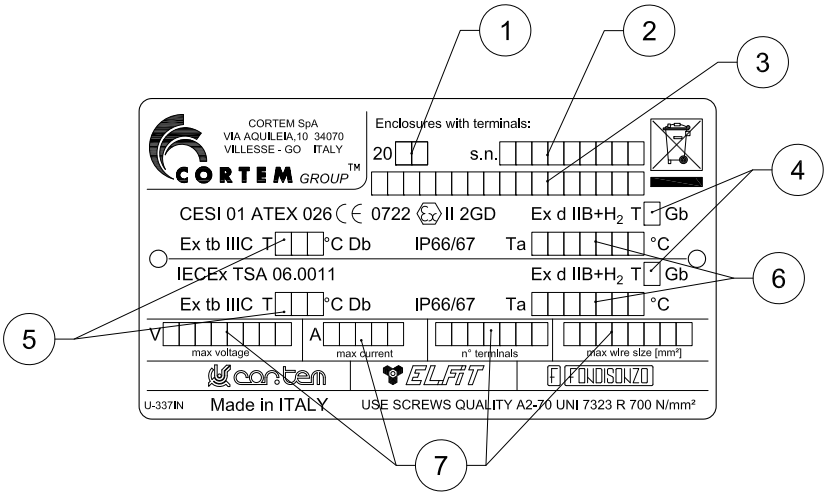

Data filled in:
1. year of manufacture
2. serial number
3. product code
4. temperature class
5. maximum surface temperature
6. ambient temperature
7. electrical specs per certificate

Examples of terminal strips with minimum installation distances

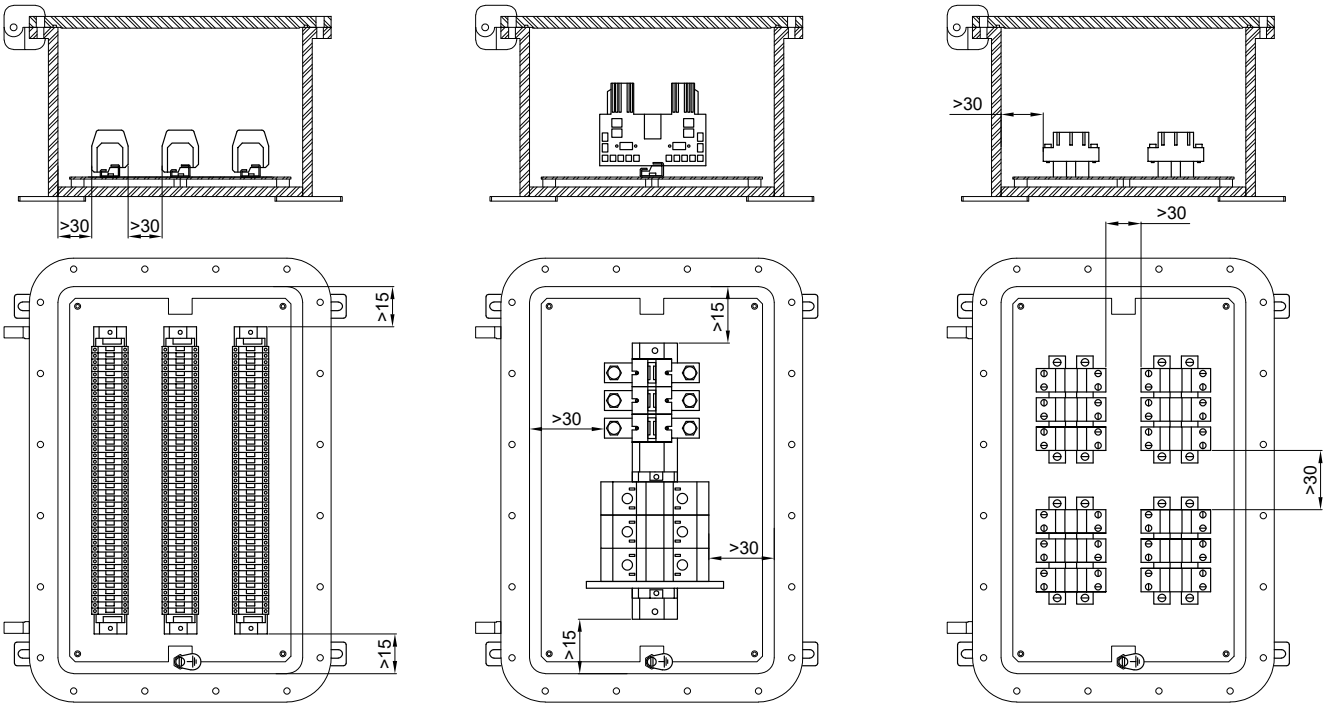

TYPE OF ENCLOSURE	MAXIMUM NUMBER OF TERMINALS HOUSED									
	TERMINAL CROSS-SECTIONAL AREA									
	2.5	4	6	10	16	35	70	120	185	240
EJBX-01	22	17	14	12	-	-	-	-	-	-
EJBX-1	2x28	26	21	15	12	10	3	-	-	-
EJBX-2	2x38	2x28	2x22	2x15	2x12	18	4	-	-	-
EJBX-3	3x38	3x35	3x28	3x23	2x21	14	6	4	3	3
EJBX-3B	3x38	3x35	3x28	3x23	2x21	14	6	4	3	3
EJBX-4	3x48	3x38	3x30	3x29	3x25	2x18	13	6	6	5
EJBX-4B	3x48	3x38	3x30	3x29	3x25	2x18	13	6	6	5
EJBX-45	3x70	3x65	3x50	3x35	3x25	2x20	20	10	8	8
EJBX-45B	3x70	3x65	3x50	3x35	3x25	2x20	20	10	8	8
EJBX-5	3x80	3x70	3x60	3x50	3x40	2x28	22	10	10	8
EJBX-5B	3x80	3x70	3x60	3x50	3x40	2x28	22	10	10	8
EJBX-6	4x120	4x100	4x80	4x60	4x50	3x35	30	15	15	15
EJBX-6B	4x120	4x100	4x80	4x60	4x50	3x35	30	15	15	15
EJBX-7	5x130	5x110	5x95	5x75	5x60	5x45	4x35	3x20	2x18	15

Eg. 2x28= 2 rows of 28 terminals (total 56 terminals). The maximum number of standard terminals refers to the mounting of CABUR terminals

Features of junction boxes for control, monitoring and signalling units

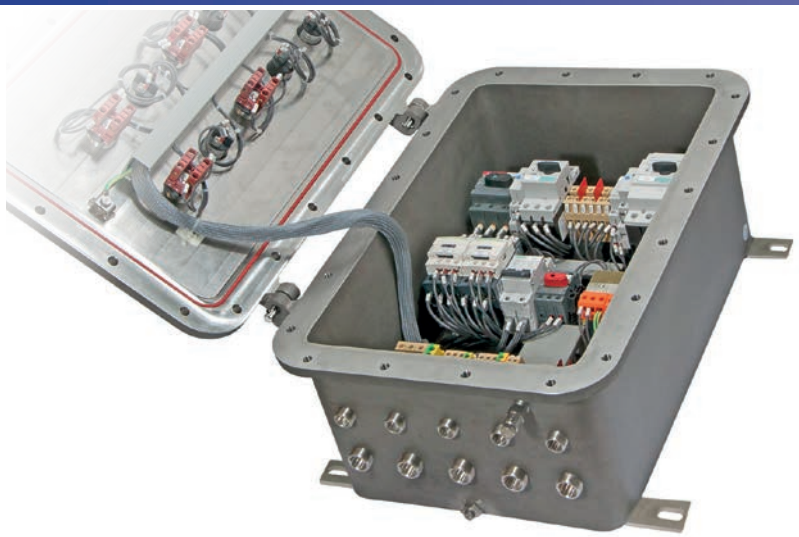

Control, monitoring and signalling units are used to produce control boards that, when positioned near the electrical equipment being controlled, enable the electrical system to operate correctly and guarantee the safety of personnel when maintenance is being performed on the system. Because they are fitted with a Manual/Automatic selector, they allow operators to select the appropriate conditions to enable work to be performed entirely safely. They offer protection and control for electrical equipment and control circuits located in explosion hazard areas and in particularly aggressive environments. They are used to hold electrical equipment, such as switches, indicators, contactors, transformers, analogue and digital components, etc.... with the option of external control by using lid-mounted Cortem control and signalling devices, such as control levers, pushbuttons, indicator lights, etc.... Cortem designs, develops and supplies full cabling for one or more enclosures tailored to your specific requirements, producing panel boards - including even extremely complex solutions - and providing a full inspection and testing service on request.

ELECTRICAL FEATURES

Rated voltage: 24 / 1000 Vac 12 / 250 Vdc
Max. current on contacts and fuses: 650 A
Rated frequency: 50 / 60Hz
Max. wattage for lamps: 5 W (for Ta +40°C)
3 W (for Ta +55°C)

Features of equipment that can be installed in enclosures to produce control and monitoring units.
Table of electrical features of components that can be installed in enclosures to produce control, monitoring and signalling units.
(The values refer to the catalogues of the leading manufacturers of electrical/electronic components available on the market)

COMPONENT TYPE	Max. V (Volts)	Max. I (Amperes)	Max. power (Watts)
Analogue and digital instruments	660	5	10
Electronic inverters/reactors	400	-	10
PLCs Multiplexers and amplifiers	240	-	80
Testing and measuring devices	240	-	100
Circuit breakers	660	650	-
Fuses	660	400	-
Relays	500	10	12
Electronic control devices	660	-	100
Contactors	660	650	30
Timers	240	10	5
Twilight relays	240	-	2
Capacitors	660	-	-
Transformers	660	-	200
Resistors	240	-	300
Terminals	660	-	-
Reactors	277	7.5	40

Minimum air gap between components

Component voltage (V ac)	Min. air gap (mm)
60 - 250	6
250 - 380	8
380 - 500	10
500 - 660	12
660 - 1000	20
Component voltage (V dc)	**Min. air gap (mm)**
12 - 250	6

Table with maximum power dissipation values for EJBX series enclosures.

The temperature classes and maximum surface temperatures of control and monitoring unit enclosures depend on the size of the enclosure, ambient temperature and power dissipation inside the enclosure.

Enclosure type	Maximum power dissipation (Watts) with ambient temperature of **+40°C**			
	T6 class without indicator lights. Only indicator LEDs are allowed.	T5 class with indicator lights and/or LEDs	T5 class without indicator lights. Only indicator LEDs are allowed.	T4 class without indicator lights and/or LEDs
EJBX-01 / 01B	30	30	45	100
EJBX-1	45	45	65	140
EJBX-2	60	60	85	190
EJBX-3	75	75	110	245
EJBX-3B	55	55	80	180
EJBX-4	100	100	175	350
EJBX-4B	75	75	130	260
EJBX-45	140	140	240	480
EJBX-45B	120	120	210	430
EJBX-5	210	210	315	600
EJBX-5B	170	170	250	480
EJBX-55B	260	260	380	740
EJBX-55	360	360	550	1050
EJBX-6	600	600	910	1740
EJBX-6B	490	490	720	1390
EJBX-7	610	610	930	1780
EJBX-8	1384	1384	2080	3945
EJBX-8B	1154	1154	1735	3295
EJBX-8BB	927	927	1396	2655

Enclosure type	Maximum power dissipation (Watts) with ambient temperature of **+55°C**			
	T6 class without indicator lights. Only indicator LEDs are allowed.	T5 class with indicator lights and/or LEDs	T5 class without indicator lights. Only indicator LEDs are allowed.	T4 class without indicator lights and/or LEDs
EJBX-01 / 01B	25	25	40	80
EJBX-1	34	34	50	105
EJBX-2	45	45	65	142
EJBX-3	56	56	82	184
EJBX-3B	40	40	60	135
EJBX-4	75	75	130	262
EJBX-4B	56	56	100	195
EJBX-45	105	105	180	360
EJBX-45B	90	90	160	320
EJBX-5	160	160	235	450
EJBX-5B	130	130	190	360
EJBX-55B	200	200	300	565
EJBX-55	270	270	400	765
EJBX-6	460	460	680	1300
EJBX-6B	370	370	550	1040
EJBX-7	470	470	690	1310
EJBX-8	1061	1061	1553	2925
EJBX-8B	884	884	1296	2443
EJBX-8BB	711	711	1043	1970

EJBX...series Accessories available on request and spare parts

Enclosure type	Maximum power dissipation (Watts) with ambient temperature of **+70°C**			
	T6 class without indicator lights. Only indicator LEDs are allowed.	T5 class with indicator lights and/or LEDs	T5 class without indicator lights. Only indicator LEDs are allowed.	T4 class without indicator lights and/or LEDs
EJBX-01 / 01B	20	20	35	60
EJBX-1	23	23	35	70
EJBX-2	30	30	45	94
EJBX-3	37	37	54	123
EJBX-3B	25	25	40	90
EJBX-4	50	50	85	174
EJBX-4B	37	37	70	130
EJBX-45	70	70	120	240
EJBX-45B	60	60	150	290
EJBX-5	110	110	155	300
EJBX-5B	90	90	130	240
EJBX-55B	140	140	220	390
EJBX-55	180	180	250	480
EJBX-6	320	320	450	860
EJBX-6B	250	250	380	690
EJBX-7	330	330	450	840
EJBX-8	738	738	1020	1893
EJBX-8B	615	615	853	1583
EJBX-8BB	494	494	688	1279

Example of control panel

External layout

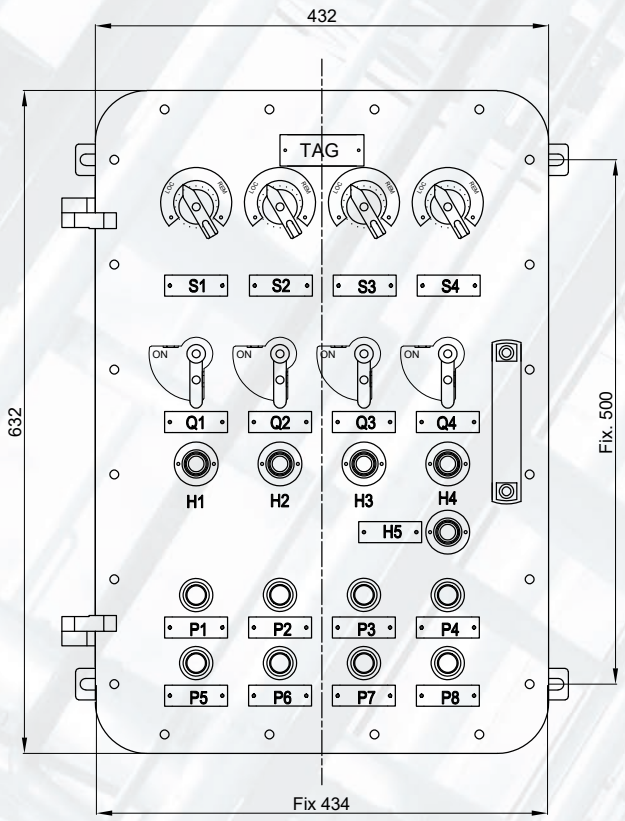

Internal layout

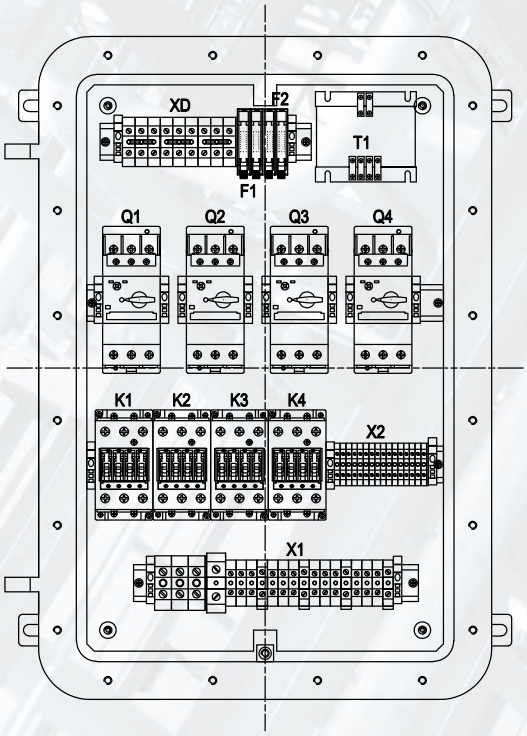

ILLUSTRATION	DESCRIPTION	MODEL	FEATURES	CODE	KEY
	Internal mounting plates	EJBX-01	Thickness 2.5mm Stainless steel (BFE-...SS)	**BFE-01SS**	ACCESSORY SPARE PART
		EJBX-1		**BFE-1SS**	
		EJBX-2		**BFE-2SS**	
		EJBX-3/3B		**BFE-3SS**	
		EJBX-4/4B		**BFE-4SS**	
		EJBX-45/45B		**BFE-45SS**	
		EJBX-5/5B		**BFE-5SS**	
		EJBX-55/55B		**BFE-55SS**	
		EJBX-6/6B		**BFE-6SS**	
		EJBX-7		**BFE-7SS**	
		EJBX-8		**BFE-8SS**	
	Breather and drain valve	Thread diameter ISO 7-R 3/8"	Material: stainless steel	**ECD-210S**	ACCESSORY SPARE PART
	Cable glands and unions		For models and codes, visit www.cortemgroup.com		ACCESSORY SPARE PART
	Sealed bushings		For models and codes, visit www.cortemgroup.com		ACCESSORY SPARE PART
	Lid-mounted control and signalling devices		For control and signalling device models and codes, see control and monitoring device chapter		ACCESSORY SPARE PART
	O-ring between body and lid	EJBX-01	Material: red-coloured silicone	**K01-131/1S**	SPARE PART
		EJBX-1		**K1-131/1S**	
		EJBX-2		**K2-131/1S**	
		EJBX-3/3B		**K3-131/1S**	
		EJBX-4/4B		**K4-131/1S**	
		EJBX-45/45B		**K45-131/1S**	
		EJBX-5/5B		**K5-131/1S**	
		EJBX-6/6B		**K6-131/1S**	
		EJBX-7		**K61-131/S**	
		EJBX-8		**K52-131S**	
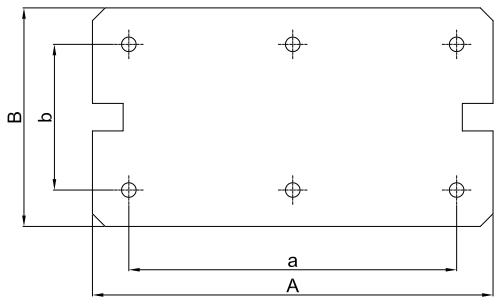
Envolventes	Internal mounting plates				
	A	B	a	b	Cod.
EJBX-01	180	120	140	80	BFE-01SS
EJBX-1	220	120	180	80	BFE-1SS
EJBX-2	340	140	300	100	BFE-2SS
EJBX-3 /3B	280	200	240	160	BFE-3SS
EJBX-4 /4B	340	240	300	200	BFE-4SS
EJBX-45 /45B	460	280	440	260	BFE-45SS
EJBX-5 /5B	540	340	500	300	BFE-5SS
EJBX-55 /55B	570	370	540	340	BFE-55SS
EJBX-6 /6B	720	500	680	460	BFE-6SS
EJBX-7	850	550	820	520	BFE-7SS
EJBX-8	990	690	960	660	BFE-8SS