EJB

- Zone 1, 2, 21, 22
- Group IIB+H_2
- Aluminium junction boxes
- IP 66 / 67

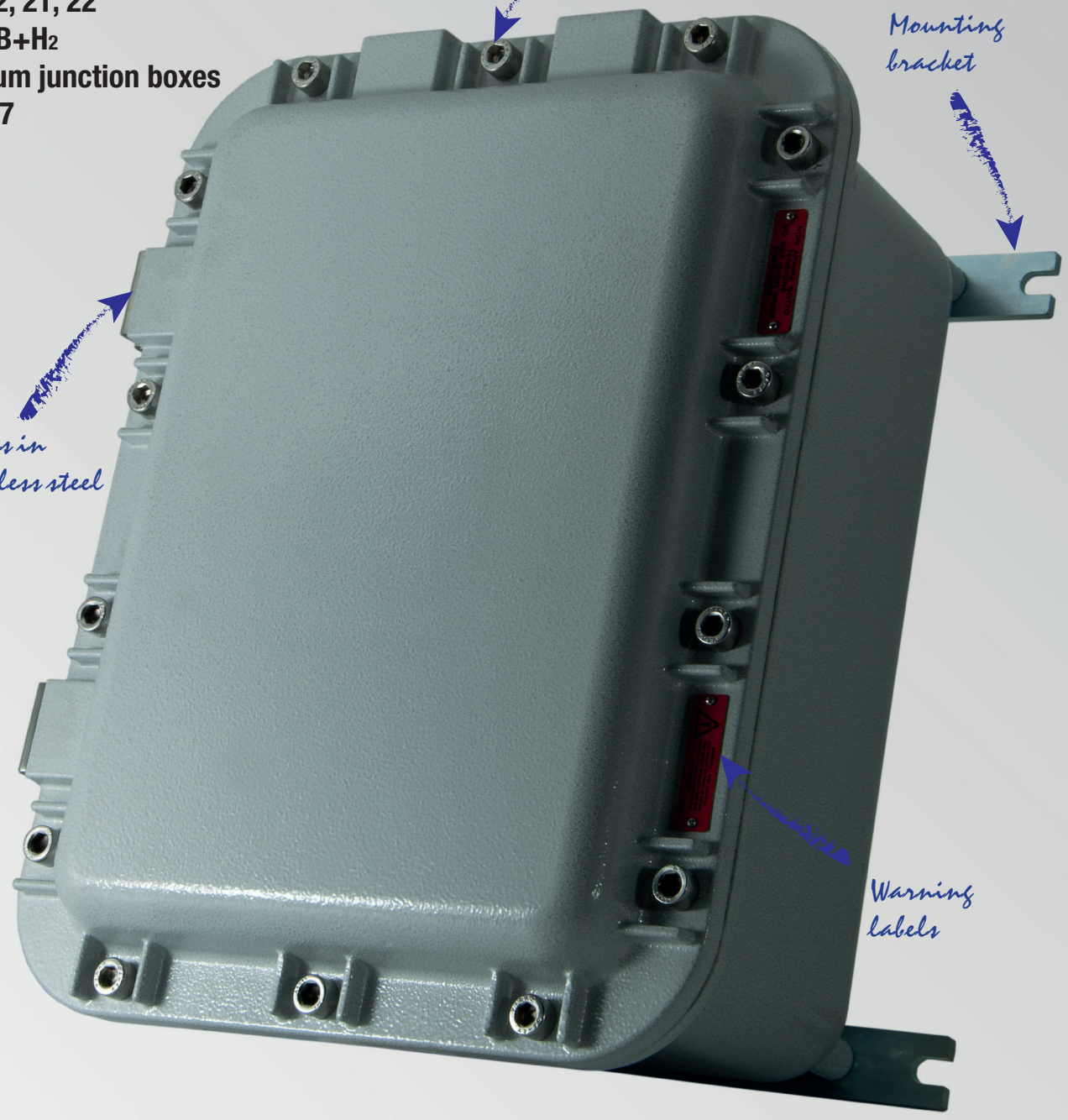

Silicone gasket between body and lid



External earth screw in body

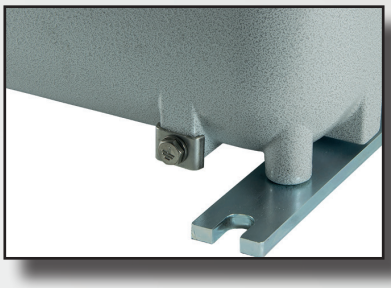

Internal earth screw in body



EJB-... series Aluminium junction boxes gas group IIB+H_2

EJB series junction boxes are suitable for installation in any areas of a plant where there is a risk of explosion and/or fire, or areas where combustible dust is present, classified as Zone 1, 2, 21, 22. The quality of this product is recognized and valued the world over for its specific aluminium alloy and the mechanical property of its finishes. The EJB series is mostly used as a box to carry terminals and busbars, fuse carriers, transformers, reactors and barriers, though it is also used to produce control and signalling boards, light and power boards and surge arresters, and motor starter boxes with various configurations, which are custom made to the requirements of our customers worldwide.

Cortem Group labels its products with a non-removable adhesive label featuring a hologram and an alphanumerical univocal code, as a safety measure against the illegal sale of fakes so that all the products are guaranteed as original. Non-compliance with the International standards entails serious risks for the environment, especially for those working daily on the plants.



Application sectors:


Oil refineries


Chemical and petrochemical plants


Onshore plants


Offshore plants


Oil loading/ offloading wharfs


Low temperatures


Presence of hydrogen



100% Cortem product

CERTIFICATION DATA FOR EMPTY ENCLOSURES

Classification:	Group II	Category 2GD		
Installation: EN 60079.14	zone 1 - zone 2 (Gas)	zone 21 - zone 22 (Dust)		
Marking:	CE 0722 Ex II 2 GD - Ex db IIB+H_2 Gb - Ex tb IIIC Db - IP66/67			
Certification:	ATEX CESI 00 ATEX 036U			
	ATEX FIDI 25 ATEX 0001U (EJBX-6BB)			
	IEC Ex CES 14.0017U	All IEC Ex, ECASEx, UKEX, TR CU and INMETRO certification data can be downloaded from www.cortemgroup.com		
	IEC Ex FIDI 25.0003U (EJBX-6BB)			
	UKEX AVAILABLE			
	ECASEx AVAILABLE			
	INMETRO DNV 16.0099U			
	TR CU AVAILABLE			
Standards:	CENELEC EN 60079-0: 2018, EN 60079-1: 2014, EN 60079-31: 2014, EN 60529: 1991 and EUROPEAN DIRECTIVE 2014/34/UE			
Ambient Temp.:	-60°C +70°C	With boxes complete with polycarbonate indicator on lid Ta -40°C +70°C.		
	-60°C +100°C	On request only for EJB enclosures without accessories and control and signalling devices (except EJB-01 and AQS-1 versions).		
	-60°C (Use indicator light series M-0457**AL**, M-0457**AL**/3, M-0457**IN** or M-0457**IN**/3)			
Degree of protection:	IP66/67	For enclosures without control and signalling devices		
	IP66	For enclosures with Cortem M-0...-series control and signalling devices		

This equipment can be used in an environment containing explosive atmosphere and with the presence of hydrogen.

CERTIFICATION DATA FOR ENCLOSURES WITH TERMINALS

Classification:	Group II	Category 2GD		
Installation: EN 60079.14	zone 1 - zone 2 (Gas)	zone 21 - zone 22 (Dust)		
Marking:	CE 0722 Ex II 2 GD - Ex db IIB+H_2 T... Gb - Ex tb IIIC T...°C Db - IP66/67			
Certification:	ATEX CESI 01 ATEX 027X			
	IEC Ex CES 16.0012X	All IEC Ex and ECASEx certification data can be downloaded from www.cortemgroup.com		
	ECASEx AVAILABLE			
Standards:	CENELEC EN 60079-0: 2012+A11:2013, EN 60079-1: 2014, EN 60079-31: 2014, EN 60529: 1991 and EUROPEAN DIRECTIVE 2014/34/UE			
Ambient Temp.:	-20°C (-60°C) +40°C	With temperature class T6 and maximum surface temperature T85°C.		
	-20°C (-60°C) +55°C	With temperature class T5 and maximum surface temperature T100°C.		
Degree of protection:	IP66/67			

CERTIFICATION DATA OF ENCLOSURES FOR CONTROL, MONITORING AND SIGNALLING UNITS

Classification:	Group II	Category 2GD		
Installation: EN 60079.14	zone 1 - zone 2 (Gas)	zone 21 - zone 22 (Dust)		
Marking:	CE 0722 Ex II 2 GD - Ex db IIB+H_2 T... Gb - Ex tb IIIC T...°C Db - IP66/67			
Certification:	ATEX CESI 01 ATEX 027X			
	ATEX FIDI 25 ATEX 0002U (EJBX-6BB)			
	IEC Ex CES 16.0012X	All IEC Ex, ECASEx, INMETRO, CCC and TR CU certification data can be downloaded from www.cortemgroup.com		
	IEC Ex FIDI 25.0004U (EJBX-6BB)			
	ECASEx AVAILABLE			
	INMETRO DNV 23.0313X			
	CCC AVAILABLE			
Standards:	CENELEC EN 60079-0: 2012, EN 60079-1: 2014, EN 60079-31: 2014, EN 60529: 1991 and EUROPEAN DIRECTIVE 2014/34/UE			
Ambient Temp.:	-20°C +40°C	With temperature class T6 and maximum surface temperature T85°C.		
	-20°C +55°C/+70°C	With temperature class T5, T4 and maximum surface temperature T100°C, T134°C.		
	-60°C on request. (Use indicator light series M-0457**AL**, M-0457**AL**/3, M-0457**IN** or M-0457**IN**/3)			
Degree of protection:	IP66/67	For enclosures without control and signalling devices		
	IP66	For enclosures with Cortem M-0...-series control gear		

CERTIFICATION DATA OF ENCLOSURES SERVING INTERFACE UNIT CONTROL AND MONITORING FUNCTION

Classification:	Group II	Category 2GD		
Installation: EN 60079.14	zone 1 - zone 2 (Gas)	zone 21 - zone 22 (Dust)		
Marking:	CE 0722 Ex II2(1)GD - Ex db [ia Ga] IIB+H_2 T... Gb - Ex tb IIIC T...°C Db - IP66/67			
Certification:	ATEX CESI 02 ATEX 073X			
	IEC Ex CES 16.0014X	All IEC Ex, ECASEx certification data can be downloaded from www.cortemgroup.com		
	ECASEx AVAILABLE			
Standards:	CENELEC EN 60079-0: 2009, EN 60079-1: 2007, EN 60079-11: 2011, EN 60079-26: 2007, EN 60079-31: 2009, EN 60079-0:2018, EN 60439-1, EN 60529 and EUROPEAN DIRECTIVE 2014/34/UE			
Ambient Temp.:	-20°C +40°C	With temperature class T6 and maximum surface temperature T85°C.		
	-20°C +55°C/+70°C	With temperature class T5 and maximum surface temperature T100°C.		
	-60°C on request. (Use indicator light series M-0457**AL**, M-0457**AL**/3, M-0457**IN** or M-0457**IN**/3)			
Degree of protection:	IP66/67	For enclosures without control and signalling devices		

OTHER AVAILABLE CERTIFICATES (please contact the sales department for further information)

EXTENSION n° 07/12 to EC-type examination certificate CESI 01 ATEX 027
Equipment: EJB-series control, monitoring and signalling units
EJB-55B enclosures with PDTrac partial discharge monitoring units

EXTENSION n° 04/08 to EC-type examination certificate CESI 01 ATEX 027
Equipment: EJB-series control, monitoring and signalling units
EJB-6 enclosures with RX and IBUC units

CESI 07 ATEX 047 CERTIFICATE
EJB..AD and MU..AD switchgear
Enclosures made from cast iron

CESI 11 ATEX 037 CERTIFICATE
EJB-45 with actuators. "Hook release controller" for simultaneous release of hooks
The actuators control 1,2 or 3 push-pull controls that are fed out of the enclosure through certified RRC-01 bushes

EXTENSION n° 07/12 to EC-type examination certificate CESI 01 ATEX 027
Equipment: EJB-series control, monitoring and signalling units
New type of equipment named Surge Protection Device has been added

EJB-... series Aluminium junction boxes gas group IIB+H_2



MECHANICAL FEATURES

Body and lid:	Low copper content aluminium alloy
Hinges:	Cast (except for EJB-01), stainless steel for new models
Lid handle:	Made of black painted steel for EJB-6/6B/EJB-6BB and EJB-7/7B models (see below). Made of black painted plastic for EJB-55/55B models
Gasket:	Acid, hydrocarbon and high temperature-resistant silicone, located between body and lid
Certification label:	Adhesive label located inside on empty enclosures; aluminium label riveted onto lid on other versions
Bolts and screws:	Stainless steel
Earth screws:	M6 stainless steel. On inside and outside of body and on lid complete with anti-rotation brackets
Mounting brackets:	Electrogalvanized steel (cast aluminium feet for AQS-1)
Coating:	Polyester coating RAL 7035 (Light grey)
Corrosion Resistance:	The STANDARD of the aluminium alloy used by Cortem has passed the tests required by standards EN 60068-2-30 (hot/humid cycles) and EN 60068-2-11 (salt mist tests)

Lid featuring Cortem easy-close system.



For EJB-6/6B/6BB and EJB-7/7B junction boxes, the opening and closing of the cover is facilitated by the presence of an even more sturdy handle, able to offer a greater safety of use for the operator. It is made of stainless steel AISI 316L, which, after a blasting process, is coated with a matt black powder (RAL 9005) coating that ensures pleasing aesthetics and a high resistance to physical impact and corrosion in saline environments.

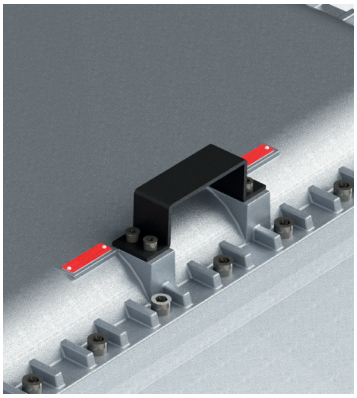

ACCESSORIES AVAILABLE ON REQUEST/ SPECIAL REQUESTS

Internal anti-condensation coating RAL 2004 (pure orange)
External polyester coating in different colour (specify the RAL number)
Breather valve Code ECD-210S or drain valve Code ECD-210S
Round or rectangular windows on lid (see section Enclosures with windows for inspection and reading instruments)
Hinges for enclosures EJB-01 Code K-0351
Internal mounting plate: 2.5mm-thick aluminium (code BFE-...). See accessories section
2.5mm-thick electrogalvanized steel (code BFE-...AC).

Thread options:

- NPT threads ANSI B1.20.1
- GAS UNI ISO 7-1 thread
- Metric threads ISO 261/965

Hinges on the short side (only for new models) example cod. EJB.5B**S**

Cortem manufactures any type of custom-made products according to customer specifications and in compliance with the certification data.

EJB-... series Aluminium junction boxes gas group IIB+H_2

Cortem is introducing a new model of EJB enclosures that will replace the entire range. This new series will be provided with new stainless steel hinges and a new lid that will allow more flexibility in the supply of the product. Cortem will then be able to offer the best solution to customer needs.

SELECTION CHART FOR ENCLOSURES WITH RIBBED LIDS

Code	Outside dimensions			Inside dimensions				Mounting			Mounting with brackets			Weight
	A	B	C	a	b	c	s1	d	e	f	D	E	F	kg
EJB-1	304	204	218	240	140	160	14	230	130	M8	230	210	9	9,4
EJB-2	424	224	218	360	160	159	14	350	150	M8	350	230	9	13,6
EJB-3	364	284	278	300	220	214	14	290	210	M8	290	290	9	17
EJB-3B	364	284	218	300	220	154	14	290	210	M8	290	290	9	14,2
* EJB-7	1000	700	500	890	590	340	30	810	510	M16	810	655	18	248
* EJB-7B	1000	700	400	890	590	240	30	810	510	M16	810	655	18	210
AQS-1	500	450	207	430	380	127	15	420	300	M12	-	-	-	31,5

* New model.

Dimensions in mm

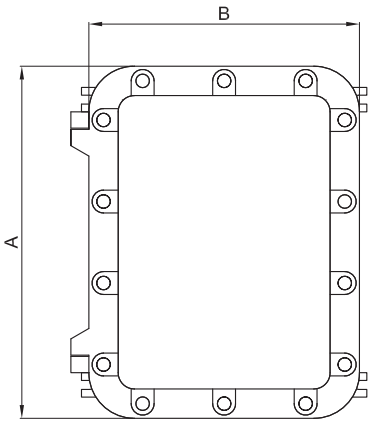

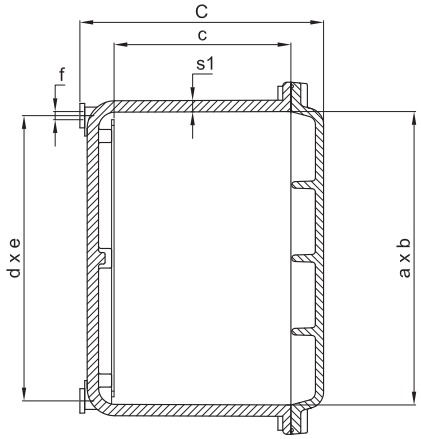

EJB-7 detail

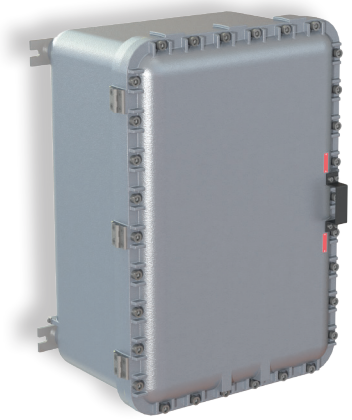

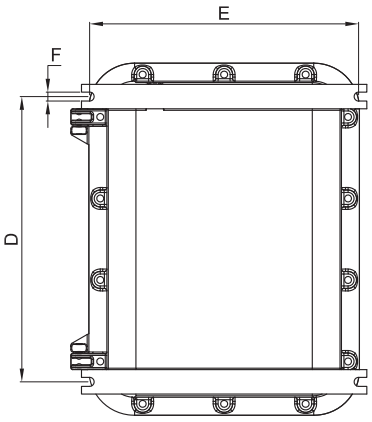

Detail of box AQS-1

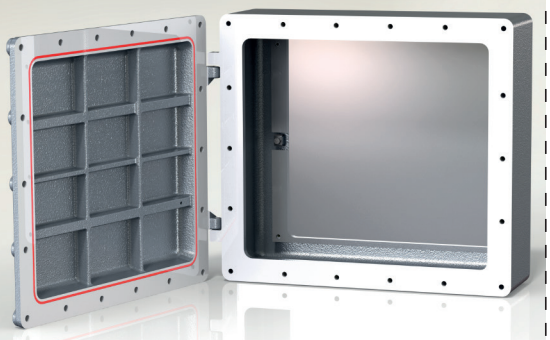

The AQS-1 series junction boxes have been designed to contain distribution terminal blocks and control switches.
Its particular compactness and the inward flange makes them ideal for all those applications in which it is necessary to realize control panels of small dimensions with the possibility of installing modular switches side by side with different types of poles and amperage. The standard hinged lid and silicone gasket make this junction box a qualitative, economical and compact choice.

EJB-... series Aluminium junction boxes gas group IIB+H_2

Aluminium enclosures with solid lids are used when there is a need to install a greater number of control and signalling devices than can be accommodated on the same enclosure with a ribbed lid or when handles need to be installed in certain positions on the lid.

SELECTION CHART FOR ENCLOSURES WITH SOLID LIDS

Code	Outside dimensions			Internal dimensions				Mounting			Mounting with brackets			Weight
	A	B	C	a	b	c	s1	d	e	f	D	E	F	kg
EJB-01	282	182	105	214	113	60	14	160	123	M6	160	154	9	5,6
EJB-1A	304	204	218	240	140	153	14	230	130	M8	230	210	9	10,3
EJB-2A	424	224	218	360	160	153	14	350	150	M8	350	230	9	15,4
EJB-3A	364	284	278	300	220	213	14	290	210	M8	290	290	9	19,4
EJB-3BA	364	284	218	300	220	153	14	290	210	M8	290	290	9	16,4
* EJB-4	432	332	299	360	260	237	14	350	250	M10	350	330	11	25,4
* EJB-4B	432	332	229	360	260	167	14	350	250	M10	350	330	11	21,4
* EJB-45	567	387	298	490	305	229	14	360	236	M10	360	356	11	38,9
* EJB-45B	567	387	248	490	305	179	14	360	236	M10	360	356	11	35,3
*EJB-48BA	507	432	271	435	360	203	16	350	425	M10	425	430	11	37,5
* EJB-5	632	432	341	560	360	275	16	350	550	M10	550	430	11	51
* EJB-5B	632	432	271	560	360	205	16	350	550	M10	550	430	11	43,4
* EJB-503	632	432	397	560	360	330	16	350	550	M10	550	430	11	59,2
EJB-55	710	510	356	630	430	273	17	600	400	M10	600	490	11	81,3
EJB-55B	710	510	256	630	430	173	20	600	400	M10	600	490	11	66,9
* EJB-6	870	650	478	760	540	369	28	680	460	M16	680	580	14	158,4
* EJB-6B	870	650	373	760	540	253	28	680	460	M16	680	580	14	138,5
* EJB-6BB	870	650	313	760	540	209	23	680	460	M16	680	580	14	112,5

* New model

Dimensions in mm

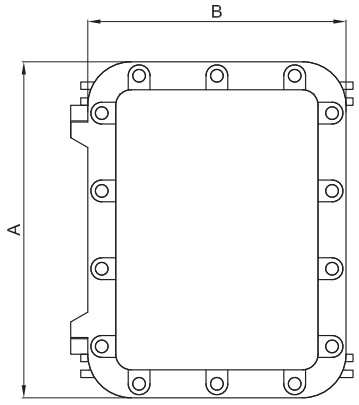

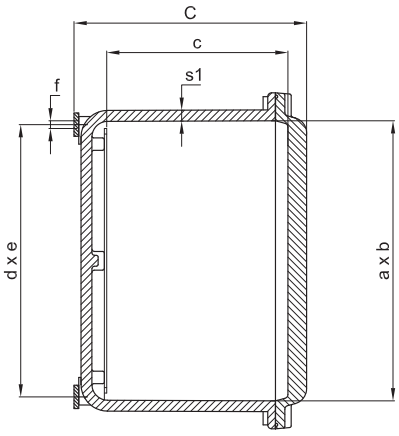

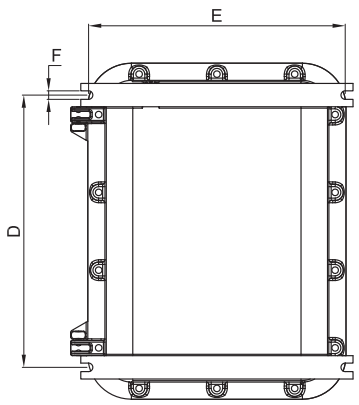

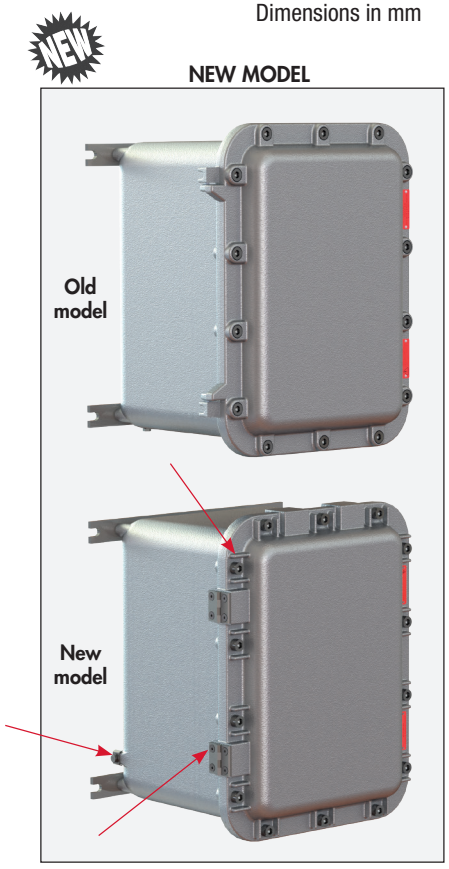

CORTEM GROUP®

THREAD COMPARISON CHART									
ISO 7-1	1/2"	3/4"	1"	1 1/4"	1 1/2"	2"	2 1/2"	3"	4"
ANSI B.20.1 NPT	1/2"	3/4"	1"	1 1/4"	1 1/2"	2"	(*)	(*)	(*)
ISO 261/965	20x1.5	25x1.5	32x1.5	40x1.5	50x1.5	63x1.5	75x1.5	90x1,5	100x1,5
D Thread diameter	**1**	**2**	**3**	**4**	**5**	**6**	**7**	**8**	**10**

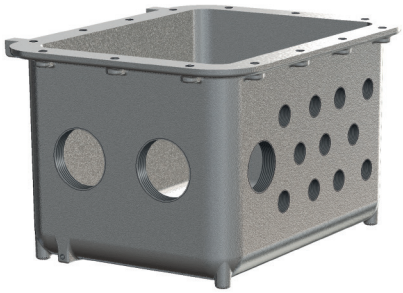

As required by the current standard, holes can be drilled by Cortem or by authorized partners who hold a production notification in accordance with ATEX Directive .

TYPE OF ENCLOSURE	HOLE DRILLING IN BODY																			
	Sides A and C										Sides B and D									
	Drilling area mm	MAXIMUM QUANTITY PER HOLE TYPE									Drilling area mm	MAXIMUM QUANTITY PER HOLE TYPE								
		1	2	3	4	5	6	7	8	10		1	2	3	4	5	6	7	8	10
EJB-1	100x120	6	4	4	2	2	1	1	1	-	200x120	12	8	6	6	4	2	2	1	1
EJB-2	120x120	6	4	4	4	2	1	1	1	1	320x120	18	12	10	9	8	4	3	2	2
EJB-3	180x180	16	12	9	6	4	4	3	2	1	260x180	20	15	12	9	6	6	4	3	2
EJB-3B	180x120	11	6	6	5	4	2	2	1	1	260x120	15	10	8	8	6	3	2	2	2
EJB-4	220x195	16	16	9	9	8	4	4	3	1	320x195	24	24	15	12	12	6	6	4	2
EJB-4B	220x130	12	8	6	6	6	3	2	2	1	320x130	18	12	10	8	8	5	3	2	2
EJB-45	277x190	24	18	12	12	9	6	5	4	2	448x190	36	30	21	18	17	10	8	6	3
EJB-45B	277x135	17	8	6	6	6	3	2	2	1	448x135	27	12	10	8	8	5	3	2	2
EJB-48BA	300x150	24	15	14	8	8	3	3	2	2	375x150	30	20	17	10	10	4	3	3	3
EJB-5	320x230	30	28	20	16	12	9	6	4	3	520x230	50	45	32	28	18	15	10	8	5
EJB-5B	320x160	24	18	15	8	8	6	3	3	2	520x160	40	27	24	14	12	10	5	4	3
EJB-55	400x195	32	28	18	15	14	8	6	3	2	600x195	44	40	27	23	21	12	10	5	4
EJB-55B	400x95	16	13	11	5	5	4	3	3	-	600x95	24	20	17	8	7	6	5	5	-
EJB-6	480x260	50	45	38	28	24	15	12	8	6	700x260	70	60	55	40	34	24	18	12	10
EJB-6B	480x160	38	27	23	14	12	10	7	4	3	700x160	54	38	33	20	18	16	9	6	5
EJB-6BB	470x110	27	16	14	12	6	5	4	4	3	690x110	41	24	20	19	9	8	6	5	5
EJB-7	530x280	66	45	40	28	24	15	12	8	6	830x280	96	75	63	44	37	24	18	12	10
EJB-7B	530x180	40	36	23	20	12	10	4	4	3	830x180	62	56	36	32	19	17	7	6	5
AQS-1	400x70	10	9	8	4	3	3	2	-	-	400x70	17	15	13	6	6	5	4	-	-
EJB-01	100x40	2	1	1	-	-	-	-	-	-	200x40	4	4	3	-	-	-	-	-	-

(*) 2 1/2" - 3" - 4" NPT holes can be drilled only on EJB-55…, EJB-6… and EJB-7…

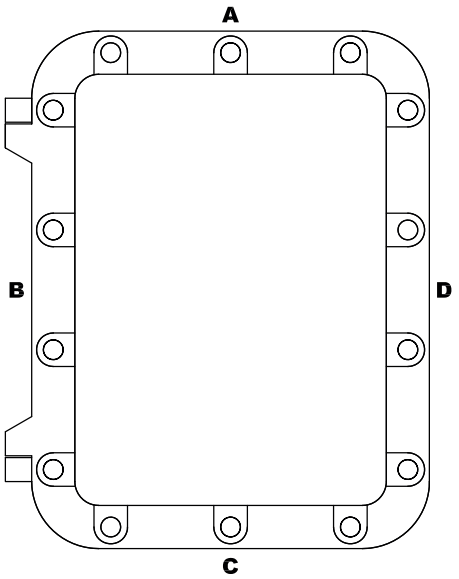

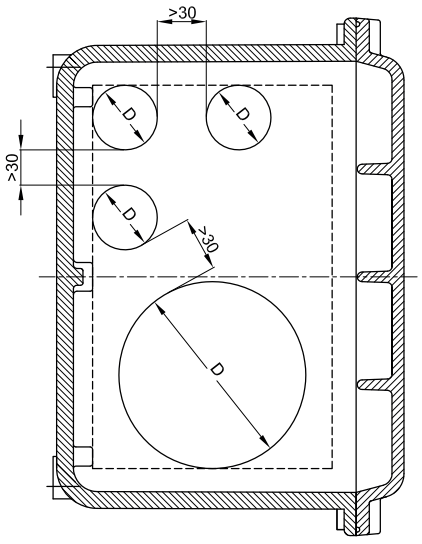



THREAD COMPARISON CHART								
D1	ISO 228	G 3/8"	G 1/2"	G 3/4"	-	-	-	-
	ISO 261/965	M16x1.5	M20x1.5	M25x1.5	M32x1.5	M35x1.5	M40x1.5	M42x1.5

TYPE OF ENCLOSURE	HOLE DRILLING IN LID	
	Max. n°. of holes allowed for ribbed lids	Max. n°. of holes allowed for solid lids
EJB-1	4	6
EJB-2	8	10
EJB-3	8	12
EJB-4	-	15
EJB-45	-	28
EJB-5	-	40
EJB-55	-	54
EJB-6	-	60
EJB-7	60	-
EJB-01	-	6 (Only ISO 261/965 holes are possible on EJB-01)
AQS-1	24	-

Notes:

- The standard featured is for illustrative purposes only since it has been designed exclusively for M42 holes.
- Standard holes refer to mounting of Cortem control and signalling devices.
- 3/8" Ø holes for Cortem std. side-mounted handles centre-to-centre distance >70mm.
- 1/2" Ø holes for Cortem std. heavy-duty series side-mounted handles centre-to-centre distance >120mm.

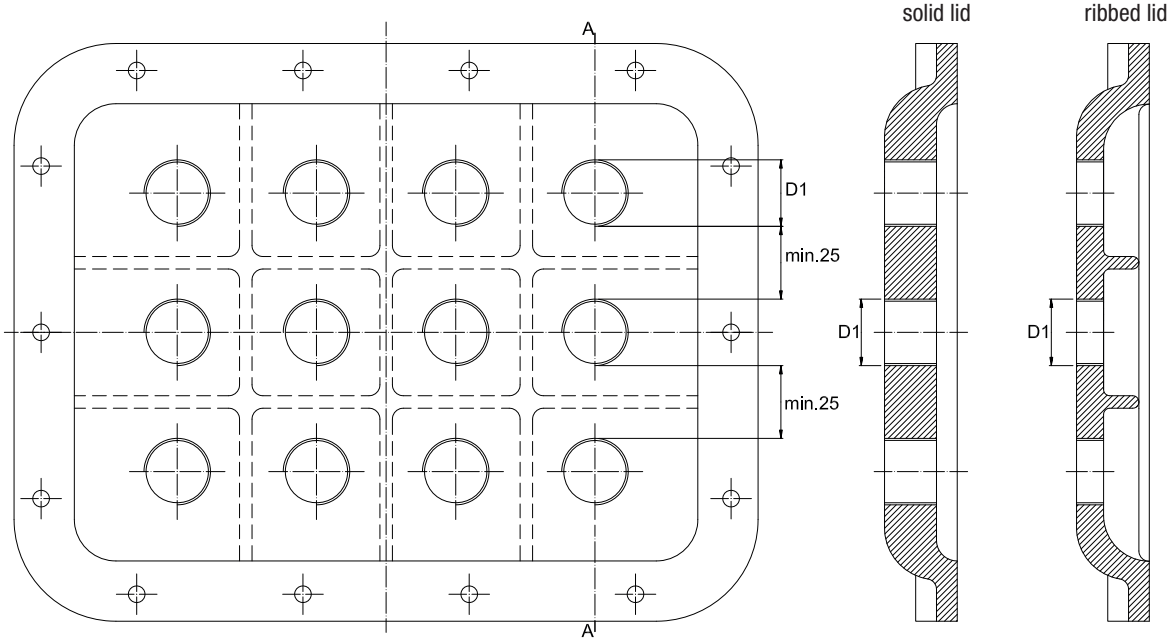



These enclosures are customized based on size, on the number of terminals or cables they are due to accommodate, or taking into account the number of cable entries and cabling requirements inside a system. Hence we can produce tailor-made solutions as long as you provide us with the appropriate parameters required at the quote request stage, such as the number of cable glands, unions or sealing fittings to be installed, so that we can determine the most suitable size of enclosure. All terminals can be fitted with your requested accessories and mounted on special rails that are fastened to the enclosure's internal mounting frames. Terminal strips can be arranged in various ways, as specified by the customer and always within the limits allowed by the certificate. The options are vertical, horizontal, in a number of rows, or on different levels using suitable spacers.

ELECTRICAL FEATURES

Rated voltage: 24 / 800 V
Rated frequency: 50 / 60 Hz

Modular terminals
Terminal cross-sectional area: 2.5; 4; 6; 10; 25; 35; 70; 95; 120; 185; 240; 300 [mm^2]
Rated current: 12.5 - 452 [A]
Max. current density: 1.5 - 7 [A/mm^2]

Multi-pole terminals
Terminal cross-sectional area: 3x16; 4x16; 3x25; 4x25; 3x40; 3x40; 4x40; 3x70; 4x125; 4x125; 3x200; 4x200; 3x315 [mm^2]
Rated current: 48 - 252 [A]
Max. current density: 0.8 - 3 [A/mm^2]

Busbars:

Dimensions of busbars:	20x5;	30x5;	40x5;	50x5;	60x5;	80x5;	100x4;	80x8;	100x5 [mm^2]
Rated current:	240	350	480	600	690	800	800	1000	1000 [A]

ATEX - IECEx label for terminal enclosures

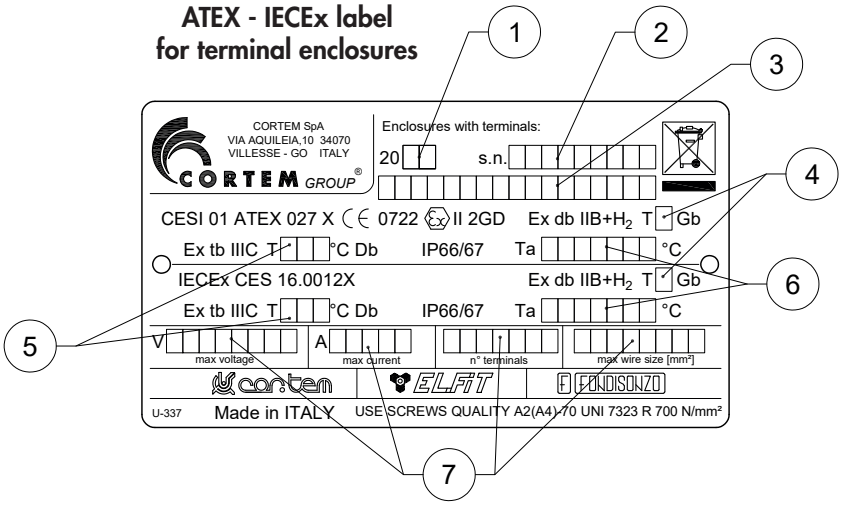

Data filled in:
1. year of manufacture
2. serial number
3. product code
4. temperature class
5. maximum surface temperature
6. ambient temperature
7. electrical specs per certificate

Examples of terminal strips with minimum installation distances

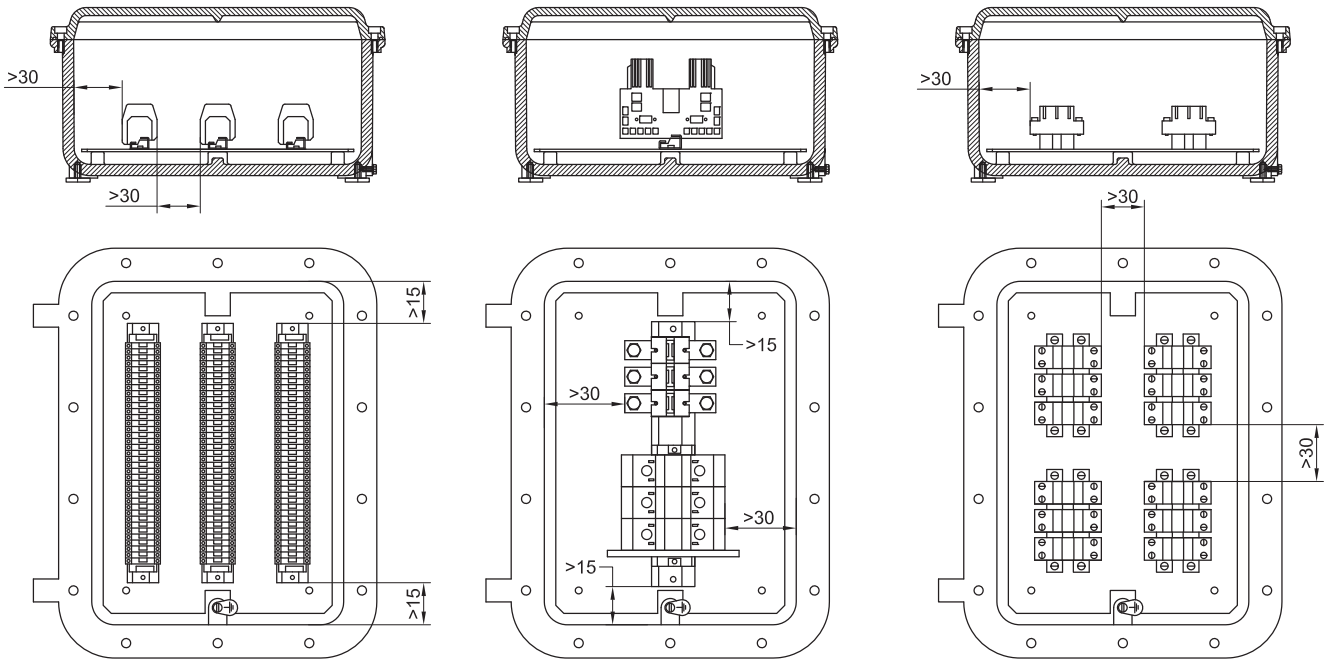

TYPE OF ENCLOSURE	MAXIMUM NUMBER OF TERMINALS HOUSED									
	TERMINAL CROSS-SECTIONAL AREA									
	2.5	4	6	10	16	35	70	120	185	240
EJB-1	2x28	26	21	15	12	10	3	-	-	-
EJB-2	2x38	2x28	2x22	2x15	2x12	18	4	-	-	-
EJB-3	3x38	3x35	3x28	3x23	2x21	14	6	4	3	3
EJB-3B	3x38	3x35	3x28	3x23	2x21	14	6	4	3	3
EJB-4	3x48	3x38	3x30	3x29	3x25	2x18	13	6	6	5
EJB-4B	3x48	3x38	3x30	3x29	3x25	2x18	13	6	6	5
EJB-45	3x70	3x65	3x50	3x35	3x25	2x20	20	10	8	8
EJB-45B	3x70	3x65	3x50	3x35	3x25	2x20	20	10	8	8
EJB-5	3x80	3x70	3x60	3x50	3x40	2x28	22	10	10	8
EJB-5B	3x80	3x70	3x60	3x50	3x40	2x28	22	10	10	8
EJB-503	3x80	3x70	3x60	3x50	3x40	2x28	22	10	10	8
EJB-55	4x90	4x80	4x65	4x50	4x40	3x30	25	13	13	13
EJB-55B	4x90	4x80	4x65	4x50	4x40	3x30	25	13	13	13
EJB-6	4x120	4x100	4x80	4x60	4x50	3x35	30	15	15	15
EJB-6B	4x120	4x100	4x80	4x60	4x50	3x35	30	15	15	15
EJB-6BB	4x120	4x100	4x80	4x60	4x50	3x35	30	15	15	15
EJB-7	5x150	5x115	5x90	5x75	5x60	4x45	2x35	2x20	2x20	2x20
EJB-7B	5x150	5x115	5x90	5x75	5x60	4x45	2x35	2x20	2x20	2x20
AQS-1	3x54	3x40	3x35	3x32	3x26	2x18	12	6	4	4
EJB-01	20	20	15	12	10	3	-	-	-	-

Eg. 2x28= 2 rows of 28 terminals (total 56 terminals). The maximum number of standard terminals refers to CABUR terminals

Features of junction boxes for control, monitoring and signalling units

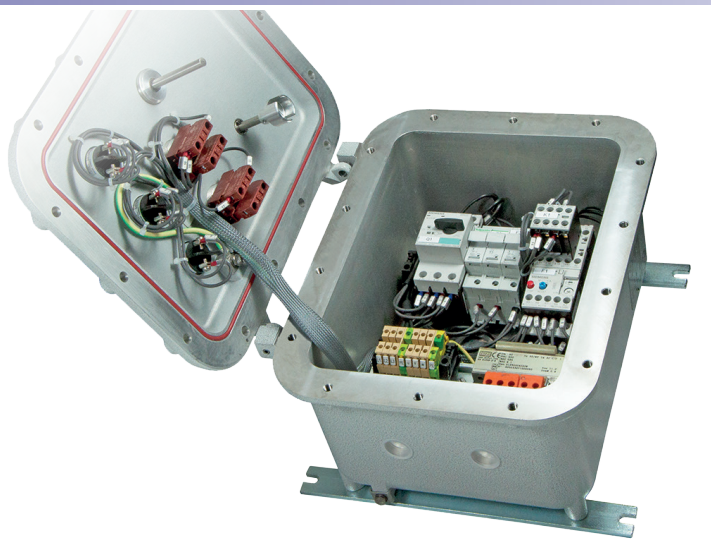



Control, monitoring and signalling units are used to produce control boards that, when positioned near the electrical equipment being controlled, enable the electrical system to operate correctly and guarantee the safety of personnel when maintenance is being performed on the system. Because they are fitted with a Manual/Automatic selector, they allow operators to select the appropriate conditions to enable work to be performed entirely safely. They offer protection and control for electrical equipment and control circuits located in explosion hazard areas and in particularly aggressive environments. They are used to hold electrical equipment, such as switches, indicators, contactors, transformers, analogue and digital components, etc.... with the option of external control by using lid-mounted Cortem control and signalling devices, such as control levers, pushbuttons, indicator lights, etc.... Cortem designs, develops and supplies full cabling for one or more enclosures tailored to your specific requirements, producing panel boards - including even extremely complex solutions - and providing a full inspection and testing service on request.

ELECTRICAL FEATURES

Rated voltage: 24 / 1000 Vac 12 / 250 Vdc
Max. current on contacts and fuses: 650 A
Rated frequency: 50 / 60Hz
Max. wattage for lamps: 5 W (for Ta +40°C) /3 W (for Ta +55°C)

Electrical characteristics valid for size EJB-55, EJB-6, EJB-6B, EJB-6BB, EJB-7, EJB-7B. (T5 100°C).
Rated voltage: up to 690 Vac
Max. current: up to 1000 A

Electrical characteristics valid for size EJB-45, EJB-5, EJB-5B, EJB-55B. (T5 100°C).
Rated voltage: up to 750 Vcc
Max. current: up to 630 A

Features of equipment that can be installed in enclosures to produce control and monitoring units.
Table of electrical features of components that can be installed in enclosures to produce control, monitoring and signalling units.
(The values refer to the catalogs of the leading manufacturers of electrical/electronic components available on the market)

COMPONENT TYPE	Max. V (Volts)	Max. I (Amperes)	Max. power (Watts)
Analogue and digital instruments	660	5	10
Electronic inverters/reactors	400	-	10
PLCs Multiplexers and amplifiers	240	-	80
Testing and measuring devices	240	-	100
Circuit breakers	660	650	-
Fuses	660	400	-
Relays	500	10	12
Electronic control devices	660	-	100
Contactors	660	650	30
Timers	240	10	5
Twilight relays	240	-	2
Capacitors	660	-	-
Transformers	660	-	200
Resistors	240	-	300
Terminals	660	-	-
Reactors	277	7.5	40

Minimum air gap between components

Component voltage (V ac)	Min. air gap (mm)
60 - 250	6
250 - 380	8
380 - 500	10
500 - 660	12
660 - 1000	20
Component voltage (V dc)	**Min. air gap (mm)**
12 - 250	6

Identification and description of special equipment that can be installed inside.

Enclosures with batteries

Option of installing low-capacity batteries ≤1.5Ah, for powering small electronic devices or backup memories.
Whatever the case, the minimum distance of 20mm between the components installed and the inside walls of the enclosure must be met.

Enclosures with inverters

EJB-4, EJB-45, EJB-5, EJB-6, EJB-7 series enclosures, depending on the maximum ambient temperature (+40°C or + 55°C), can be fitted with inverters (ABB ACS550 or similar types) provided maximum power dissipation falls within the permitted range (see table).

Enclosure type	Maximum inverter power for Ta +40°C	Maximum inverter power for Ta +55°C	Maximum inverter power	Cooling fan flow rate
EJB-4	2.2 kW	1.5 kW	73 W	44 m^3/h
EJB-45	2.2 kW	1.5 kW	73 W	44 m^3/h
EJB-5	5.5 kW	4.0 kW	172 W	44 m^3/h
EJB-6	7.5 kW	5.5 kW	232 W	88 m^3/h
EJB-7	7.5 kW	5.5 kW	232 W	88 m^3/h

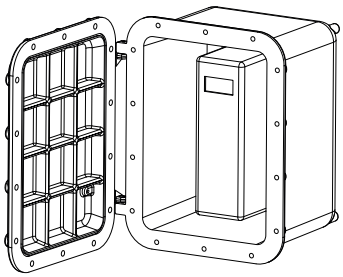

Enclosures with surge arresters

Option of installing PRD or similar types of surge arresters, with a maximum protection limit of 65kA; whatever the case, the minimum distance of 20 mm between the arrester and the inside walls of the enclosure must be met.

Enclosures with fibre-optic cables

The enclosures have provision for feeding multiple (not single) fibre-optic cables in and out. The permitted optical power and radiation limits for optical cables are:
- 35mW and 5mW/m^2 for T4 temperature class
- 15mW and 5mW/m^2 for T6 temperature class

Enclosures with power transformer

Option of installing single-phase transformers (and three-phase transformers with EJB-7 only) provided maximum power is within the limits allowed by the certificate.

Enclosures with radio-frequency sources

Option of installing components with radio-frequency sources in the 9kHz to 60GHz range that can be used for continuous and pulsed transmission of signals. Antennas can be installed inside or outside the enclosure and must:
- comply with one of the protection types indicated in standard EN 60079-0
- be installed outside the hazardous area.

For more information, refer to CESI 01 ATEX 027X.



Table with maximum power dissipation values for EJB and AQS series enclosures.

The temperature classes and maximum surface temperatures of control and monitoring unit enclosures depend on the size of the enclosure, ambient temperature and power dissipation inside the enclosure.

Enclosure type	Maximum power dissipation (Watts) with ambient temperature of **+40°C**			
	T6 class without indicator lights. Only indicator LEDs are allowed.	T5 class with indicator lights and/or LEDs	T5 class without indicator lights. Only indicator LEDs are allowed.	T4 class without indicator lights and/or LEDs
EJB-01	30	30	45	100
EJB-1	45	45	65	140
EJB-2	60	60	85	190
EJB-3	75	75	110	245
EJB-3B	55	55	80	180
EJB-4	100	100	175	350
EJB-4B	75	75	130	260
EJB-45	140	140	240	480
EJB-45B	120	120	210	430
EJB-5	210	210	315	600
EJB-5B	170	170	250	480
EJB-503	230	230	345	660
EJB-55	260	260	380	740
EJB-55B	210	210	315	600
EJB-6	600	600	910	1740
EJB-6B	490	490	720	1390
EJB-6BB	390	390	575	1110
EJB-7	770	770	1170	2270
EJB-7B	600	600	910	1740
AQS-1	100	100	150	280

Enclosure type	Maximum power dissipation (Watts) with ambient temperature of **+55°C**			
	T6 class without indicator lights. Only indicator LEDs are allowed.	T5 class with indicator lights and/or LEDs	T5 class without indicator lights. Only indicator LEDs are allowed.	T4 class without indicator lights and/or LEDs
EJB-01	25	25	40	80
EJB-1	34	34	50	105
EJB-2	45	45	65	142
EJB-3	56	56	82	184
EJB-3B	40	40	60	135
EJB-4	75	75	130	262
EJB-4B	56	56	100	195
EJB-45	105	105	180	360
EJB-45B	90	90	160	320
EJB-5	160	160	235	450
EJB-5B	130	130	190	360
EJB-503	176	176	255	495
EJB-55	200	200	300	565
EJB-55B	160	160	235	450
EJB-6	460	460	680	1300
EJB-6B	370	370	550	1040
EJB-6BB	295	295	440	832
EJB-7	590	590	890	2090
EJB-7B	460	460	680	1300
AQS-1	75	75	110	205

Enclosure type	Maximum power dissipation (Watts) with ambient temperature of **+70°C**			
	T6 class without indicator lights. Only indicator LEDs are allowed.	T5 class with indicator lights and/or LEDs	T5 class without indicator lights. Only indicator LEDs are allowed.	T4 class without indicator lights and/or LEDs
EJB-01	20	20	35	60
EJB-1	23	23	35	70
EJB-2	30	30	45	94
EJB-3	37	37	54	123
EJB-3B	25	25	40	90
EJB-4	50	50	85	174
EJB-4B	37	37	70	130
EJB-45	70	70	120	240
EJB-45B	60	60	150	290
EJB-5	110	110	155	300
EJB-5B	90	90	130	240
EJB-503	122	122	165	390
EJB-55	140	140	220	390
EJB-55B	110	110	155	300
EJB-6	320	320	450	860
EJB-6B	250	250	380	690
EJB-6BB	200	200	305	550
EJB-7	410	410	610	1910
EJB-7B	320	320	450	860
AQS-1	50	50	70	130

ELECTRICAL FEATURES

Rated voltage:	24 / 1000 Vac	12 / 250 Vdc
Max. current on contacts and fuses:	400 A	
Rated frequency:	50 / 60Hz	
Max. wattage for lamps:	3 W (for Ta +55°C)	
Associated apparatus:	max. voltage Um≤250V	

GENERAL INSTALLATION INFORMATION

The maximum power dissipation inside the enclosure depends on the maximum current on contacts and fuses, the size of the enclosure, the temperature class (or maximum surface temperature for 2GD category) and ambient temperature, as specified in the maximum power dissipation tables (see previous page).
The maximum power dissipation must not exceed the values given in the table when non-'Ex i' components and 'Ex i' components (with 1.1W maximum power dissipation) are installed together.
The maximum power dissipation possible inside the enclosure will also depend on the maximum power dissipation of terminals, contacts and cables; whatever the case, the current density value allowed in the enclosure is prescribed by EN 60439-1, IEC 60439-1.

Details of barrier mounting inside enclosures

The "omega" rail, in accordance with EN 60079-11, is suitable for mounting barriers inside 'Ex d' enclosures.
Barriers are mounted (according to the manufacturer's directions) *7.5* mm away from the base of the enclosure and are secured to the DIN rail with 2 earth terminals (nominal cross-sectional area 6-10 mm) and 2 standard terminals for omega rails (EN 60079-11).
Up to how many barriers can be installed in the enclosures will depend on the properties of the barriers in question; in addition, the maximum number of barriers must not exceed the limit allowed by the certificate in any case.

Associated equipment can also be mounted on a DIN rail; when it is mounted on the enclosure's internal mounting plate, reference must be made to the minimum prescribed distances. Whether mounted on a rail or mounting plate, associated equipment must meet the following requirements:

Separators

When separators are used, they must be appropriately sized; their thickness and fastening inside the enclosure must be suitably determined and separators must allow air to circulate inside the enclosure.

Incoming cables

Incoming cables for 'Ex i' circuits must be suitably labelled or the area around the entry must be coloured blue RAL 5015. 'Ex i' entries must be clearly identified

Installation of 'Ex i' and non-'Ex i' components inside the enclosure.

Ex d IIB certified enclosures complete with accessories can contain only Ex ia IIB/IIC associated equipment; in this case, the resulting version becomes Ex d [ia] IIB.

Connection of internal cables

Cables are connected inside the enclosure to the barriers in accordance with EN 60079-11, with one side for connecting 'Ex i' cables and the opposite side for connecting non-'Ex i' cables.
Connection in 'Ex i' circuits must be made using insulated cables only; there must be no connections to non-'Ex i' circuits and no more than one cable can be connected to a single terminal. 'Ex i' cables cannot be grouped together with non-'Ex i' cables; in addition, 'Ex i' cables and non-'Ex i' cables must be kept separated. The minimum distance between the 2 types of cables must be 8 mm. The minimum insulation level for non-'Ex i' cables must be greater than 1.5 kV; the minimum insulation level for 'Ex i' cables must be greater than 0.5 kV.

Internal connections

When routing cables belonging to 'Ex i' circuits, the cables must be identified in one of the following ways:

- cables must have blue insulation (as long as there are no other cables inside the enclosure with this colour).
- 'Ex i' cables must be kept separate from non-'Ex i' cables with blue cable raceways.
- 'Ex i' cables must be grouped together, using a tie, for example, and the area identified with a blue label.

  Warning 'Ex i' circuits

- cables for power circuits must have a cross-sectional area of at least 1.5 mm^2.
- 'Ex i' circuits must be kept at a distance of 50 mm from non-'Ex i' circuits.
- the earth connection must meet European standard EN 60079-14.

The number of items of equipment mounted inside the enclosures and their layout will vary based on the following:

- in accordance with EN 60079-1 and IEC 60079-1, the equipment contained inside the enclosure can be arranged in any way provided that at least 40% of the surface area of each section is left free.
- equipment must be set at a suitable distance to accommodate cable wiring.

Maximum dimensions of 'Ex ia' equipment that can be installed inside enclosures.

	d	e	f
EJB-01	140	40	20
EJB-1	160	60	110
EJB-2	280	80	110
EJB-3	150	140	170
EJB-3B	150	140	110
EJB-4	280	180	190
EJB-4B	280	180	120
EJB-45	410	225	170
EJB-45B	410	225	120
EJB-5	480	280	220
EJB-5B	480	280	150
EJB-55	550	350	340
EJB-55B	550	350	240
EJB-6	670	450	300
EJB-6B	670	450	200
EJB-6BB	670	450	120
AQS-1	350	300	90

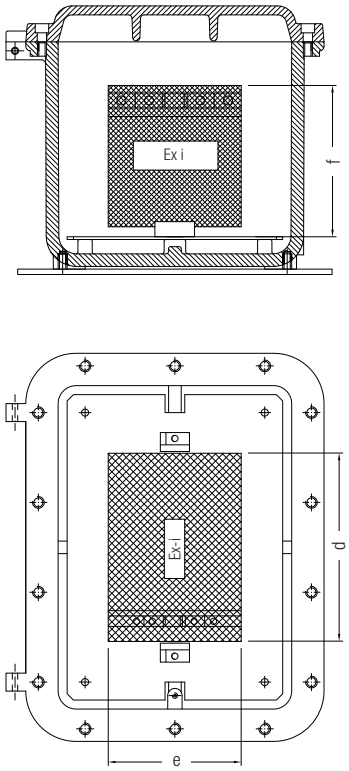

Examples of installation of associated equipment - minimum distances.

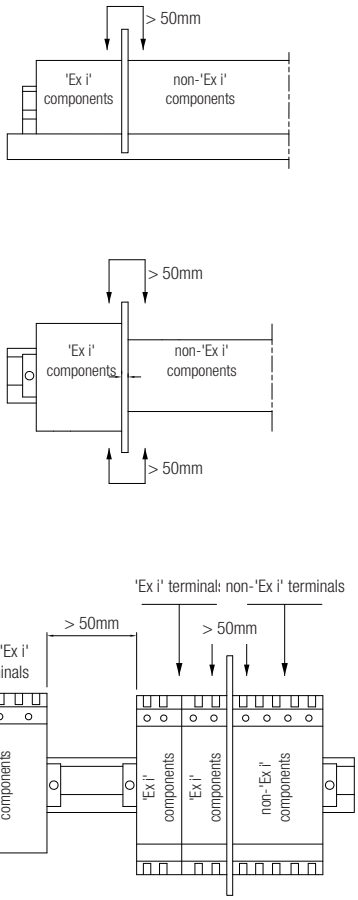

Example of interface unit (with associated equipment) complete with separator

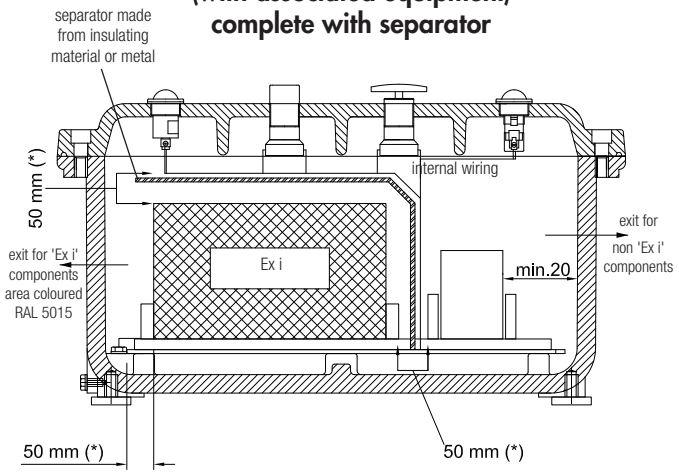

Example of interface unit without separator

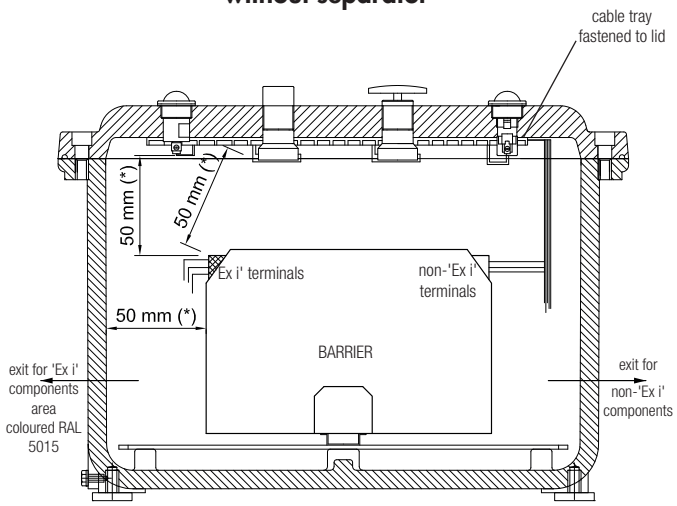

NOTES

(*) 50 mm is the minimum safe distance between 'Ex i' components and non-'Ex i' components (and/or conducting parts).

- The active and passive barriers that can be installed in the enclosures must have their own ATEX certificate.
- The maximum voltage entering barriers on non-'Ex i' circuits must be less than 250 V.

EJB-... series Junction boxes with round viewing windows

EJB series junction boxes are used as enclosures for electrical equipment that requires a visual interface with the outside. Voltmeters, ammeters and other analogue and digital measuring instruments are typical examples of installations that require a window for taking direct readings. These enclosures are also used to house monitoring instruments such as infra-red photoelectric cells and twilight sensors that provide pulses for control and signalling equipment (opening/closing, alarms, etc....). Our technical department will decide what size enclosures to use based on your requirements and determine the internal layout so that all the dimensional and electrical parameters prescribed by the certificate are met. We can install equipment to your specifications within the technical limits allowed by the certificate and based on our standard control and signalling devices.





K-0253
Ø 90



K-0254
Ø 140



K-0255
Ø 180

DIMENSIONAL DRAWING OF ENCLOSURES WITH ROUND VIEWING WINDOWS

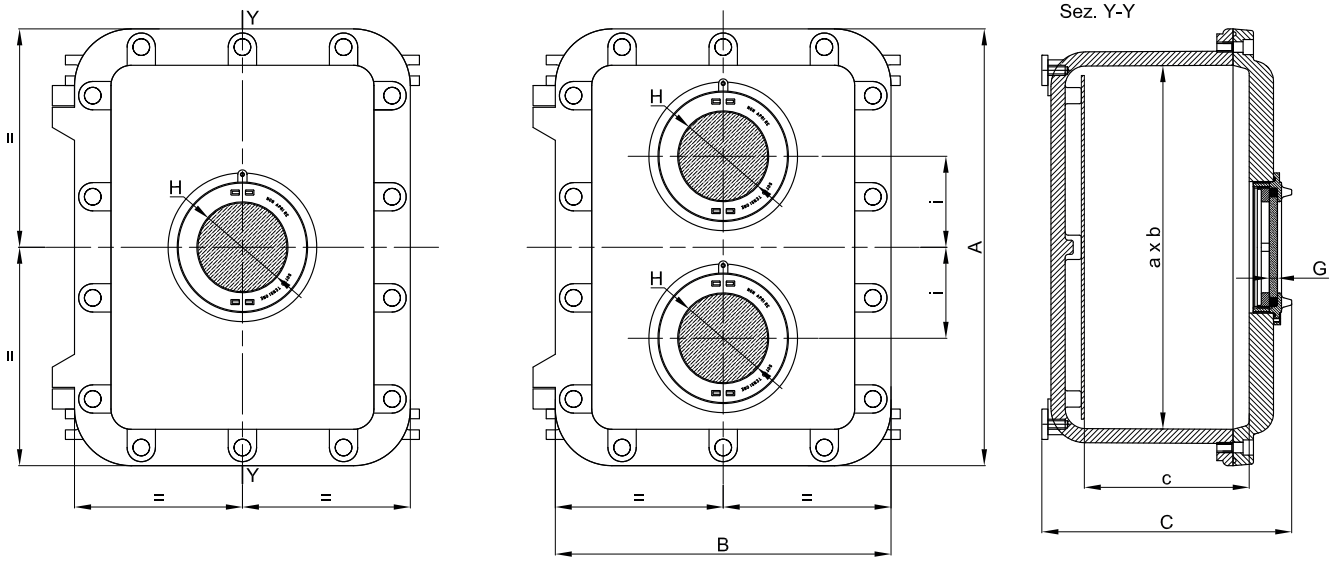

WINDOW DETAIL (cross-section)

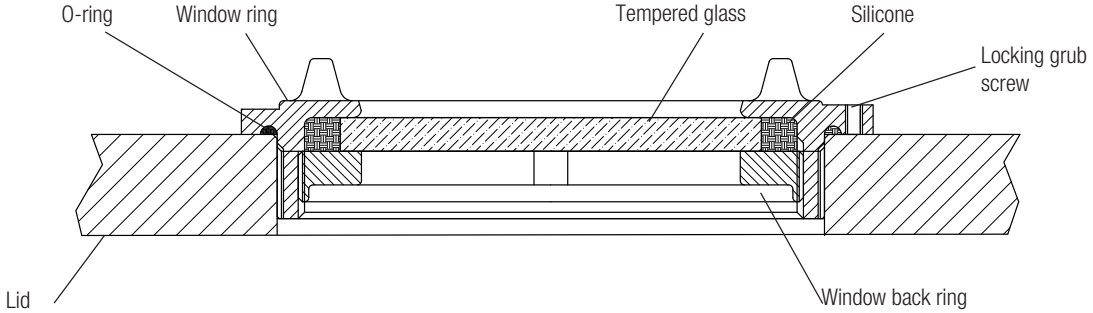

EJB-... series Junction boxes with round viewing windows

Code	Outside dimensions			Inside dimensions			N° of windows	Size of windows			Weight
	A	B	C	a	b	c		H	G	i	kg
EJB-2/1W0	424	224	218	360	160	153	1	90	10	-	
EJB-3/1W0	364	284	278	300	220	213	1	90	10	-	
EJB-3B/1W0	364	284	218	300	220	153	1	90	10	-	
EJB-4/2W0	432	332	299	360	260	233	2	90	10	90	
EJB-4B/2W0	432	332	229	360	260	163	2	90	10	90	
EJB-4/1W2	432	332	299	360	260	233	1	140	12	-	
EJB-4B/1W2	432	332	229	360	260	163	1	140	12	-	
EJB-45/2W0	567	387	298	490	305	229	2	90	10	90	
EJB-45B/2W0	567	387	253	490	305	179	2	90	10	90	
EJB-45/1W2	567	387	298	490	305	229	1	140	12	-	
EJB-45B/1W2	567	387	253	490	305	179	1	140	12	-	
EJB-5/2W0	632	432	341	560	360	275	2	90	10	140	
EJB-5B/2W0	632	432	271	560	360	205	2	90	10	140	
EJB-5/1W2	632	432	341	560	360	275	1	140	12	-	
EJB-5B/1W2	632	432	271	560	360	205	1	140	12	-	
EJB-5/1W3	632	432	341	560	360	275	1	180	15	-	
EJB-5B/1W3	632	432	271	560	360	205	1	180	15	-	
EJB-503/2W0	632	432	397	560	360	330	2	90	10	140	
EJB-503/1W2	632	432	397	560	360	330	1	140	12	-	
EJB-503/1W3	632	432	397	560	360	330	1	180	15	-	
EJB-55/3W0	710	510	356	630	430	273	3	90	10	-	
EJB-55B/3W0	710	510	256	630	430	173	3	90	10	-	
EJB-55/2W2	710	510	356	630	430	273	2	140	12	130	
EJB-55B/2W2	710	510	256	630	430	173	2	140	12	130	
EJB-55/2W3	710	510	356	630	430	273	2	180	15	160	
EJB-55B/2W3	710	510	256	630	430	173	2	180	15	160	
EJB-6/2W0	870	650	480	760	540	353	2	90	10	-	
EJB-6B/2W0	870	650	380	760	540	253	2	90	10	-	
EJB-6BB/2W0	870	650	303	760	540	209	2	90	10	-	
EJB-6/2W2	870	650	480	760	540	353	2	140	12	-	
EJB-6B/2W2	870	650	380	760	540	253	2	140	12	-	
EJB-6BB/2W2	870	650	303	760	540	209	2	140	12	-	
EJB-6/1W3	870	650	480	760	540	353	1	180	15	-	
EJB-6B/1W3	870	650	380	760	540	252	1	180	15	-	
EJB-6BB/1W3	870	650	303	760	540	209	1	180	15	-	
EJB-7/3W0	1000	700	500	890	590	340	3	90	10	-	
EJB-7B/3W0	1000	700	400	890	590	240	3	90	10	-	

We can provide standard windows to meet your requirements for the various enclosure types for such purposes as viewing analogue or digital instruments, indicators of various kinds.



DIMENSIONAL DRAWING OF ENCLOSURES WITH RECTANGULAR WINDOWS (tempered glass).

Position of standard window in centre.

Non-standard window positions or dimensions on request.

(drawing 1)

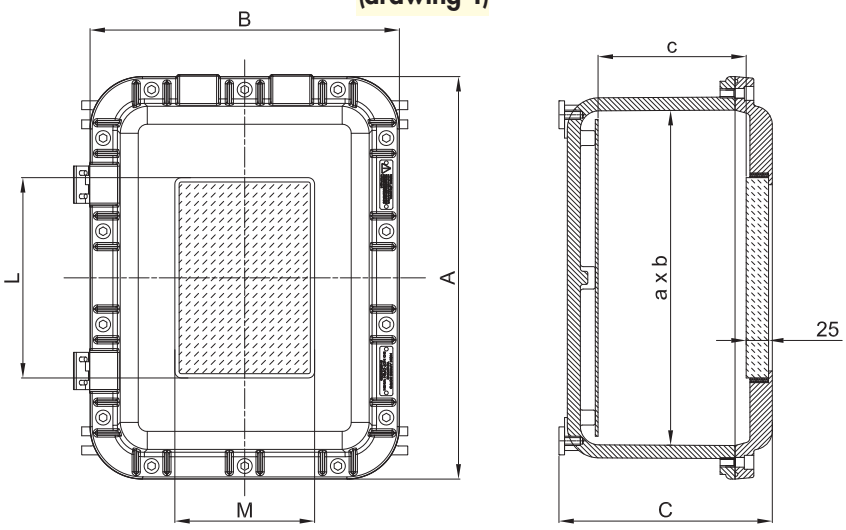

Code	Outside dimensions			Internal dimensions			Window size		Positioning of window	Weight
	A	B	C	a	b	c	M	L		kg
Enclosures with standard machined windows										
EJB-1/1508	304	204	218	240	140	149	80	150	Central as illustrated in "drawing 1". Non-standard window positioning or dimensions on request	
EJB-2/2508	424	224	218	360	160	149	80	250		
EJB-3/2015	364	284	278	300	220	209	150	200		
EJB-3B/2015	364	284	218	300	220	149	150	200		
EJB-4/3020	432	332	299	360	260	229	200	300		
EJB-4B/3020	432	332	229	360	260	159	200	300		
EJB-45/3020SP	567	387	298	490	305	229	200	300		
EJB-45B/3020SP	567	387	248	490	305	184	200	300		
EJB-5/3020SP	632	432	341	560	360	271	200	300		
EJB-5B/3020SP	632	432	271	560	360	201	200	300		
EJB-503/3020SP	632	432	397	560	360	327	200	300		
EJB-55/3020	710	510	356	630	430	270	200	300		
EJB-55B/3020	710	510	256	630	430	170	200	300		
EJB-6/3020	870	650	480	760	540	348	200	300		
EJB-6B/3020	870	650	380	760	540	248	200	300		
EJB-6BB/3020	870	650	303	760	540	209	200	300		
EJB-7/2010	1000	700	500	890	590	340	100	200	Central (ribbed lid)	
EJB-7B/2010	1000	700	400	890	590	240	100	200		

DON'T FORGET TO ORDER THE ACCESSORIES

Example: Enclosure type EJB-55 + Internal mounting plate BFE-55 + Hinges 218-9301 + other...see key

EJB-... series Accessories available on request and spare parts

ILLUSTRATION	DESCRIPTION	MODEL	FEATURES	CODE	KEY
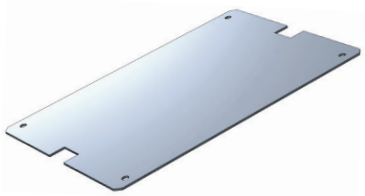	Internal mounting plates	EJB-01	Thickness 2.5mm Aluminium (BFE-...) Galvanized steel (BFE-...AC) Stainless steel (BFE-...SS)	**BFE-01**	ACCESSORY SPARE PART
		EJB-1		**BFE-1**	
		EJB-2		**BFE-2**	
		EJB-3/3B		**BFE-3**	
		EJB-4/4B		**BFE-4**	
		EJB-45/45B		**BFE-45**	
		EJB-48BA		**BFE-48**	
		EJB-5/5B		**BFE-5**	
		EJB-55/55B		**BFE-55**	
		EJB-6/6B/6BB		**BFE-6**	
		EJB-7/7B		**BFE-7**	
		AQS-1		**K-171**	
	Breather and drain valve	Thread diameter ISO 7-R 3/8"	Material: stainless steel	**ECD-210S**	ACCESSORY SPARE PART
	Hinges (2 per enclosure)	EJB-01	Material: stainless steel	**K-0351**	ACCESSORY SPARE PART
	Cable glands and unions		For models and codes, visit www.cortemgroup.com		ACCESSORY SPARE PART
	Sealed bushings		For models and codes, visit www.cortemgroup.com		ACCESSORY SPARE PART
	Lid-mounted control and signalling devices		For control and signalling device models and codes, see control and monitoring device chapter	**M-0...**	ACCESSORY SPARE PART
	N°2 hinges per enclosure (n°3 per EJB-6, EJB-7)	EJB-...	Material: stainless steel	**218-9301**	SPARE PART
		EJB-6 / EJB-7		**218-9303**	
	Mounting brackets	EJB-01	Material: galvanized steel	**K01-237**	SPARE PART
		EJB-1		**K1-237**	
		EJB-2		**K2-237**	
		EJB-3/3B		**K3-237**	
		EJB-4/4B		**K4-237**	
		EJB-45/45B		**K45-237**	
		EJB-48BA EJB-5/5B		**K5-237**	
		EJB-55/55B		**K55-237**	
		EJB-6/6B/6BB		**K6-237**	
		EJB-7/7B		**K7-237**	
	O-ring between body and lid	EJB-01	Material: red-coloured silicone	**K01-131/1S**	SPARE PART
		EJB-1		**K1-131/1S**	
		EJB-2		**K2-131/1S**	
		EJB-3/3B		**K3-131/1S**	
		EJB-4/4B		**K4-131/1S**	
		EJB-45/45B		**K45-131/1S**	
		EJB-48BA		**K48-131/1S**	
		EJB-5/5B		**K5-131/1S**	
		EJB-55/55B		**K55-131S**	
		EJB-6/6B/6BB		**K6-131/1S**	
		EJB-7/7B		**K61-131S**	

Dimensional drawings of internal mounting plates and mounting brackets

Enclosures	Internal mounting plates				
	A	B	a	b	Code
EJB-01	205	100	193	53	BFE-01
EJB-1	220	120	180	80	BFE-1
EJB-2	340	140	300	100	BFE-2
EJB-3 /3B	280	200	240	160	BFE-3
EJB-4 /4B	340	240	300	200	BFE-4
EJB-45 /45B	460	280	440	260	BFE-45
EJB-48BA	400	320	360	280	BFE-48
EJB-5 /5B	530	330	500	300	BFE-5
EJB-55 /55B	600	400	560	360	BFE-55
EJB-6 /6B /6BB	720	500	680	460	BFE-6
EJB-7 /7B	850	550	820	520	BFE-7
AQS-1	400	360	380	330	K-171

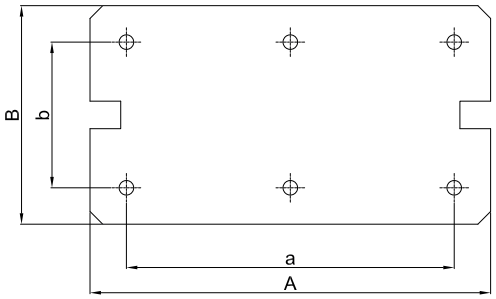

Enclosures	Mounting brackets				
	A	B	E	F	Code
EJB-1	230	30	210	9	K1-237
EJB-2	250	30	230	9	K2-237
EJB-3 /3B	310	30	290	9	K3-237
EJB-4 /4B	350	30	330	11	K4-237
EJB-45 /45B	376	30	356	11	K45-237
EJB-48BA EJB-5 /5B	450	30	430	11	K5-237
EJB-55 /55B	510	30	496	11	K55-237
EJB-6 /6B /6BB	620	50	580	14	K6-237
EJB-7 /7B	690	70	655	18	K7-237

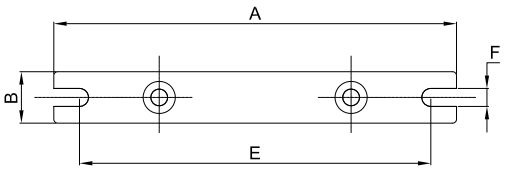

Example of control panel with floor-mounting system and detail of connection with sealed bushings.

